Bolted Chemical Seal
BCS 600



Specifications
- Body material: AISI 316L / 1.4404
- Diaphragm material: AISI 316L / 1.4435
- Diaphragm size: 50mm
- Bolting: A4-80, 8x M10 cap screws
- Instrument connection: 12mm socket suitable with connectors 1/2” BSPF / NPTF or others on request
- Process connection: 1/2” BSPM / NPTM

Special features
- Diaphragm protected against rupture with backup convolution

Available certification
- 2.1 Certificate of conformity
- 3.1 Material certificate
- Others on request

How to order
Please specify: model, process connection, certificates
Example: BCS 600, 1/2” NPTM

Introduction
BCS 600 is a high-pressure bolted chemical seal equipped with an internally welded diaphragm.

Pressure ratings:
0/600 bar at 20°C (PTFE Gasket)
0/500 bar at 250°C (PTFE Gasket)
0/100 bar at 400°C (Graphite Gasket)

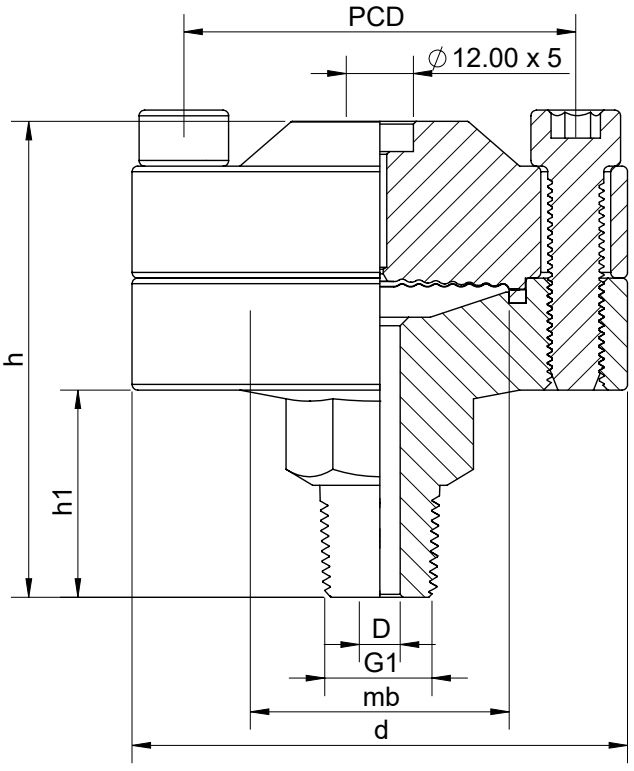

BCS 600 Dimensions in mm							
D	h	h1	G	mb	d	SW	Weight kg
88.5	85	57	½” NPTM	50	7.3	29	2.2

Web: www.pci-instruments.com | Email: sales@pci-instruments.com | Tel: +44 (0)1704 509090