# Bi-metal Dial Thermometer
# TETROTEMP 100




## Introduction

The PCI Instruments TT100 dial thermometers are designed with a robust bimetallic sensing element, providing a cost effective and dependable solution for temperature measurement. Ideally suited for rigid stem applications, the TT100 offers durability, simplicity, and low maintenance, making it a practical choice for a wide range of industrial processes.

## Probe connection types

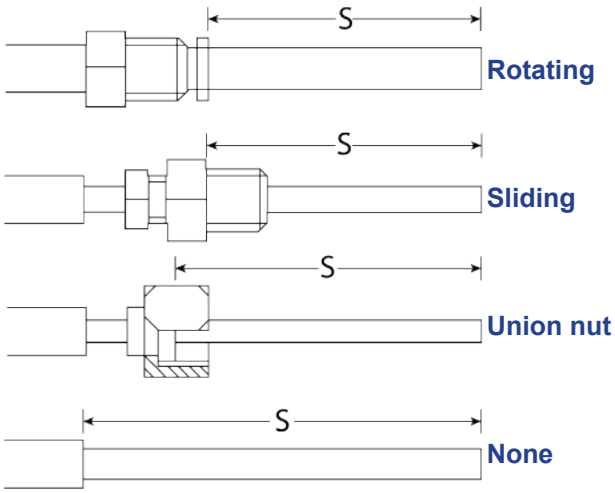


## Specifications

**Diameters**: 80-100-150mm
**Case:** st. st. 304, bayonet type ring
**Protection degree:** IP56
**Transparent**: Acrylic
**Movement**: Brass
**Dial**: aluminium with black numerals on white background
**Pointer**: Aluminium., black painted, adjustable
**Sensing element**: cold welded bimetallic coil
**Capillary material**: AISI 316
**Bulb material** : AISI 316
**Dimension bulb**: standard Ø6mm, Ø8mm
**Connection** dimension: ¼", ½", ¾", 1" NPT or BSP
**Mounting**: see table at page 2
**Ranges**: see table at page 2
**Over range**: +30% F.S.
**Accuracy**: class 1
**Ambient temperature limit:** -25/+65°C
**Limit**: can be used for continuous service up to 400°C

## Options and accessories

- ATEX version
- Special scale
- Safety glass window
- Thermowell (See related datasheet)

## Available certification

- 2.1 certificate of conformity
- 3.1 material certificate
- Test certificate for indication accuracy
- ATEX 94/9/EC conformity certificate (for ATEX version)

## How to order

Please specify: model, mounting, case diameter, range, probe immersion 'S', connection, options
Example: TT100, A, 100mm, 0/60°C, immersion 50 x 6mm, ½"NPT sliding






Web: www.pci-instruments.com | Email: sales@pci-instruments.com | Tel: +44 (0)1704 509090

# Bi-metal Dial Thermometer
# TETROTEMP 100

## Mounting styles
## Rigid stem

Type A - bottom connection, direct mounting

Type D - back connection, direct mounting

Type H - multi-angle connection, direct mounting

Type A

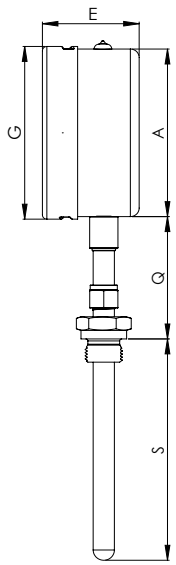


Type D

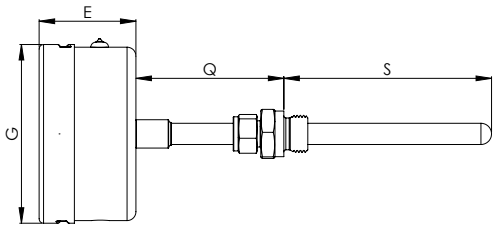


Type H

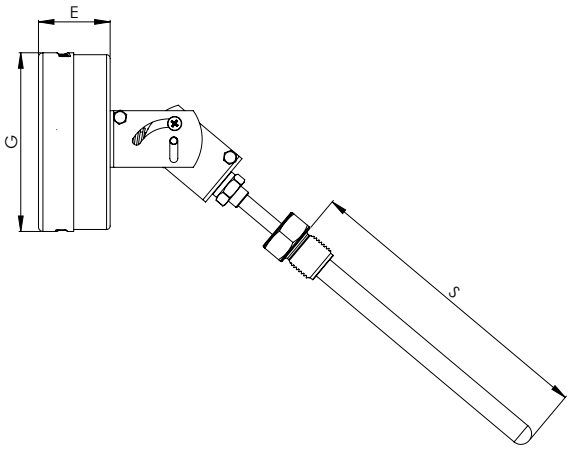


| DN | G | E | A | Q | S | Bulb dimension |
|---|---|---|---|---|---|---|
| 80 | 90 | 38 | 80 | 20 | On request | 6 mm |
| 100 | 112 | 38, 27 Type D, H | 98 | 20 | | 6 mm |
| 150 | 164 | 53, 27 Type D, H | 148 | 20 | | 6 mm |

Measurements in mm

| Temperature ranges °C | | | | | | | | | | |
|---|---|---|---|---|---|---|---|---|---|---|
| | -50/+50 | -20/+80 | -20/+60 | -20/+40 | 0/+60 | 0/+80 | 0/+100 | 0/+120 | 0/+150 | 0/+200 |
| | 0/+250 | 0/+300 | 0/+400 | | | | | | | |

Available on request double scales and scale in °F



Web: www.pci-instruments.com | Email: sales@pci-instruments.com | Tel: +44 (0)1704 509090