Tank Spud Diaphragm seal Clamp Type TS-C

'Quality Matters'



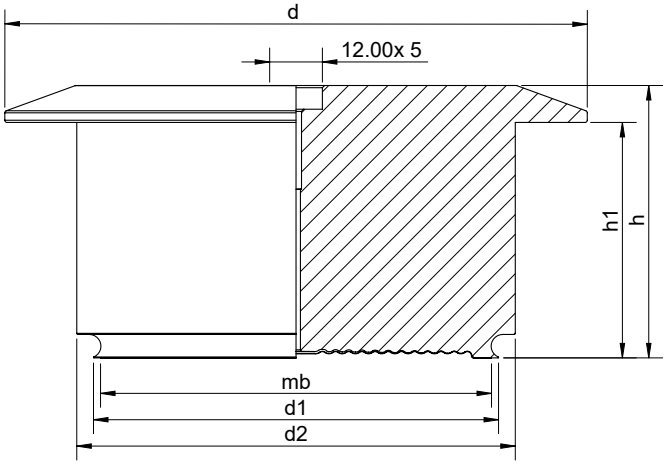

Dimensions (mm) Tank Spud					
d	h	h1	mb	d1	d2
132.5	62	53.6	89	92	99.8

Introduction

The TS-C Tank Spud Seal. This type of diaphragm seal features a spud connection, which is commonly used for mounting on storage tanks or pipelines, ensuring a secure and leak-proof interface. The clamp-type design allows for easy installation and removal without the need for complex tools, making maintenance more convenient.

Special features

- Flush welded diaphragm (free of dead space)
- Diaphragm protected against rupture with backup convolution
- Helium leak tested to ensure integrity of diaphragm

Diaphragm seal specifications

- Flange body material: AISI 316L
- Wetted parts and diaphragm material: AISI 316L
- Instrument connection: capillary socket
- Clamp size 4”
- Extension length: 2" (approx)
- Diaphragm Diameter: 89mm

Available certification

- 2.1 Certificate of conformity
- 3.1 Material certificate
- 3.1 Material certificate with NACE conformity MR-01-75
- PMI Positive Material Identification
- Others on request

How to order

Please specify: model, instrument connection, certificates

Example: TS-C, capillary socket, 3.1 material certificate

Web: www.pci-instruments.com | Email: sales@pci-instruments.com | Tel: +44 (0)1704 509090