Pressure Gauge with Electric Contacts
TETROPRESS 300 MK / IK

'Quality Matters'



Benefits
- Measuring system fully welded to housing
- Robust mechatronical pressure gauge
- Up to four switching contacts
- Tightness-tested with helium

Application
For corrosive gaseous and liquid media which are not highly viscous and do not crystallise; suitable for corrosive environments.

Inductive contact (IK)
Supply voltage: DC 5 – 25 V
Current input: ≥ 2.1 mA Max. 50 VA, max. 30 W
Switching accuracy: Approx. 2–5 % of full scale value
Operating temperature range: -20/+70 °C or corresponding to the respective measuring instruments
Adjustment range: A5–95 % measuring range of gauge

Options
- Contact systems with safety integrity level SIL 2

Magnetic spring contact (MK)
Supply voltage: Max. AC/DC 250 V
Making current and breaking current: Max. 1 A
Continuous current: Max. 0.6
Switch rating: Max. 50 VA, max. 30 W
Contact: Ag80 Ni20 Au 10 µm
Switching accuracy: Approx. 2–5 % of full scale value
Operating temperature range: -20/+70 °C or corresponding to the respective measuring instruments
Adjustment range: 5–95 % measuring range of gauge

Technical specifications
Nominal size: 100, 160mm
Accuracy class (EN 837-1/6)**:** 1,0
Operating temperature range: Medium: Max. 150 °C
Ambient: -20/+60 °C
Degree of protection: IP 54 (EN 60529)
Ranges: See ordering table
Connection: Stainless steel 316L, bottom
Electrical connection: Junction box
Measuring element: Bourdon tube, SS316 Ti/316L
≤ 60 bar: "C" type tube
> 60 bar: Helical tube
Tightness-tested with helium
Movement: Stainless steel
Dial: Aluminium, white, Scaling black
Pointer: Aluminium, black
Housing: Stainless steel 304, with blow-out
Bayonet type bezel: Stainless steel 304
Window: Plastic (Makrolon), with contact adjustment lock
Contact types: Inductive contact (IK), Magnetic spring contact (MK)

Minimum range
IK Single: 1 bar
IK dual: 1 bar
MK Single: 1.6 bar
MK dual: 1.6 bar

Switch Functions: Type, Contact/s, Action
IK / MK, 1. 1 = Single. Closes
IK / MK, 1. 2 = Single. Opens
IK / MK, 2. 11 = Dual. Closes, Closes
IK / MK, 2. 12 = Dual. Closes, Opens
IK / MK, 2. 21 = Dual. Opens, Closes
IK / MK, 2. 22 = Dual. Opens, Opens

Options
- Liquid filling (silicone oil)
- Back flange
- 3-hole fixing, panel mounting bezel
- Damping screw
- Connector
- Special scales
- Other process connections

Available certification
- 2.1 certificate of conformity
- 3.1 material certificate
- Test certificate for indication accuracy
- ATEX 94/9/EC conformity certificate (for ATEX version)

How to order
Please specify: model contact, case, range, connection, options, certificates
Example: TP300 MK1.2, 100mm, 0/10 bar, ½" BSPM

Web: www.pci-instruments.com | Email: sales@pci-instruments.com | Tel: +44 (0)1704 509090

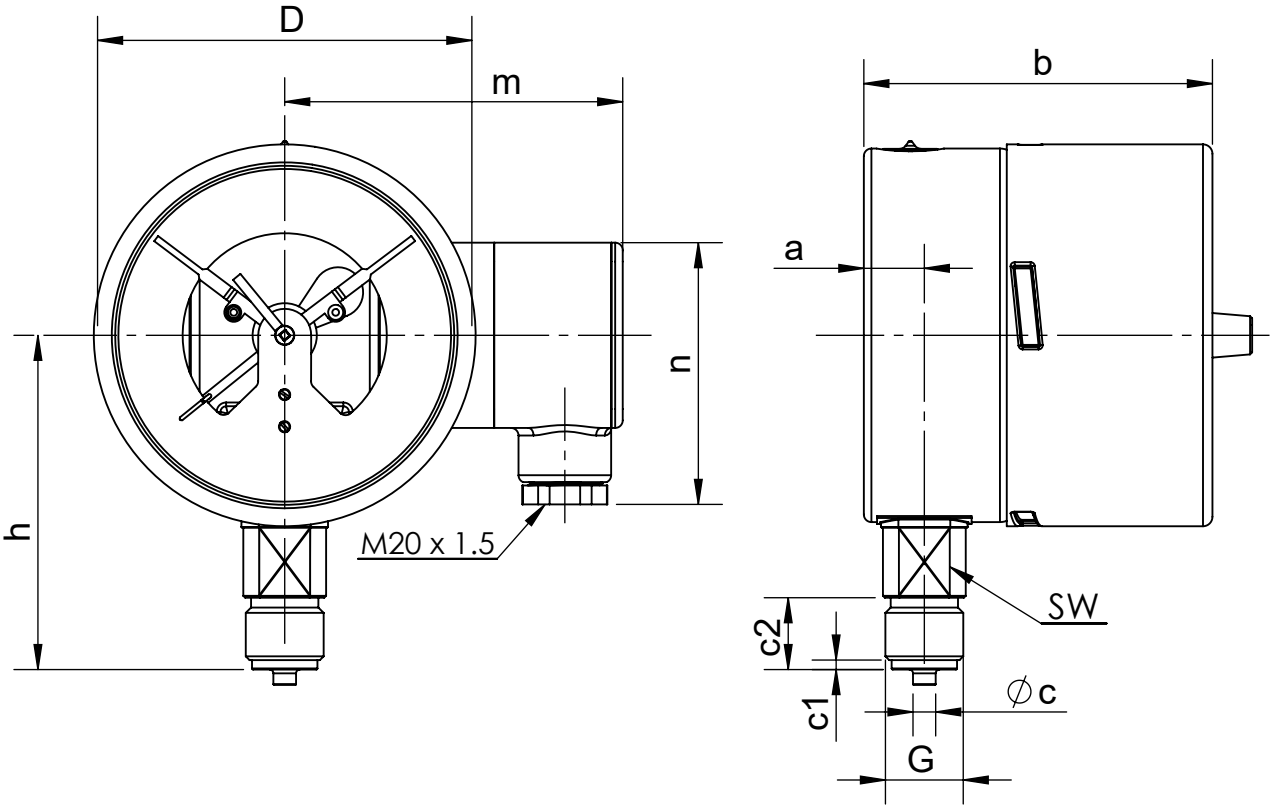

Dimensions (mm)												
NG	a	b	b1	⌀c	c1	c2	D	G	h	m	n	SW
100	15.6	87	90.5	6	3	20	101.5	G1/2B	86	92	72	22
160	17.5	97	100	6	3	20	161.5	G1/2B	116	122	72	22

Ranges														
bar	-1/0	-1/+0,6	-1/+1,5	-1/3	-1/+5	-1/+9	-1/+15	0/0,6	0/1	0/1,6	0/2,5	0/4	0/6	0/10
	0/16	0/25	0/40	0/60	0/100	0/160	0/250	0/280	0/400	0/600	0/1000			