Phenolic Type Process Pressure Gauge
PH100



Introduction

Designed for use with corrosive gaseous and liquid media that are neither highly viscous nor prone to crystallisation. Specially suitable for applications in the oil and chemical industries.

- Extremely robust pressure gauge for offshore and onshore applications
- Glass-fibre reinforced safety housing with solid baffle wall and blow-out
- Integrated pressure compensation diaphragm
- Tightness-tested with helium

Specifications

Diameters: 4 ½”
Housing: PP-GF20 (close to Phenol but more stable), black with solid baffle wall and blow-out, Integrated back flange
Protection degree: IP 67 (EN 60529)
Window: Plastic (PMMA)
Movement: Stainless steel
Dial: Aluminium, white, Scaling black
Pointer: Micro-adjustable pointer, Brass, black
Sensing element: Bourdon tube type, with “C” form for pressure ≥ 60 bar, helical wound for pressure ≥ 60 bar
Element material: Stainless steel AISI 316L/Ti
Connection material: Stainless steel AISI 316L
Connection dimension: ½”NPTM or BSPM

Mounting:
Type A bottom connection, direct mounting
Type D back connection, direct mounting
Ranges: see table at page 2
Overpressure:
+30% F.S. for range up to 60 bar
+15% F.S. for ranges from 100 to 600 bar
+10% F.S .for ranges from 1000 bar
Application area:
Static load: Full scale value
Dynamic load: 0.9 x full scale value
Short-term: 1.3 x full scale value
Accuracy: Grade 2A (accuracy of 0.5 %)
Ambient temperature limit: -40/+65°C
Fluid temperature limit: Max 100°C
Temperature error: Indication error when the temperature of the measuring system deviates from the normal temperature of 20°C: at rising temperature approx. ± 0.4 %/10 K falling temperature approx. ± 0.4 %/10 K of full scale value

Options

- Glycerine filling
- Silicone oil filling
- Measuring system copper alloy
- Measuring system Monel
- Laminated safety glass window
- Reference pointer
- Maximum pointer
- Electrical contacts
- Special scales
- Other process connections

Available certification

- 2.1 certificate of conformity
- 3.1 material certificate
- Test certificate for indication accuracy

How to order

Please specify: model, mounting, range, connection, options, certificates
Example: PH100, A, 0/10 bar, ½” BSPM,

Web: www.pci-instruments.com | Email: sales@pci-instruments.com | Tel: +44 (0)1704 509090

Phenolic Type Process Pressure Gauge
PH100

Pressure														
bar	-1/0	-1/+0.6	-1/+1.5	-1/+3	-1/+5	-1/+9	-1/+15	-0/0.6	0/1	0/1.6	0/2.5	0/4	0/6	0/10
psi	0/16	0/25	0/40	0/60	0/100	0/160	0/250	0/400	0/600					

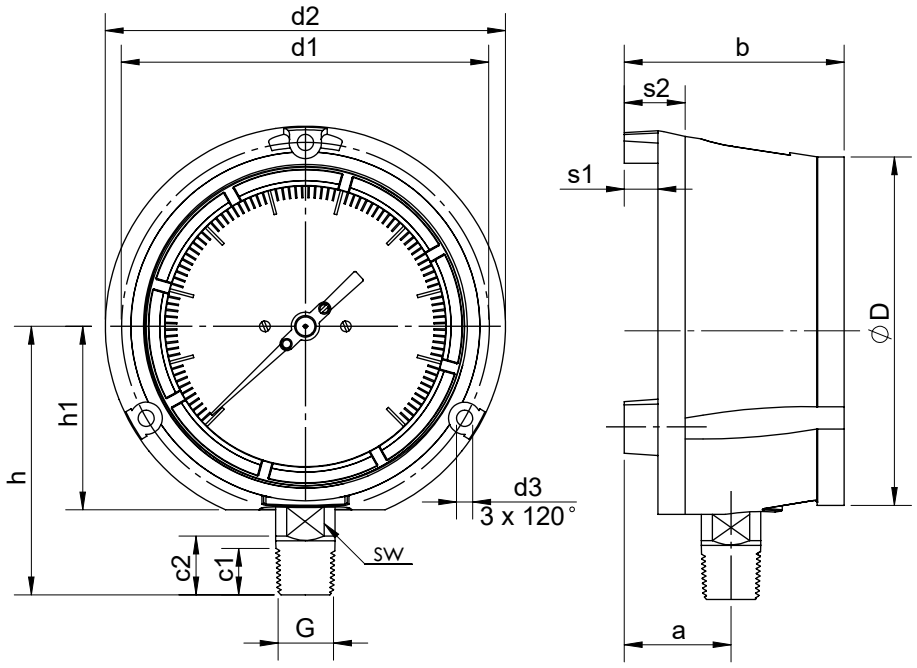

Type PH100 A: bottom connection

NG	a	b	c1	c2	d1	d2	d3	⌀D	G	h	h1	s1	s2	SW
4.1/2"	40	82.5	15	20	137	148	6	129	½-1/4NPT	102	67	12.5	25	22
Dimensions (mm)														

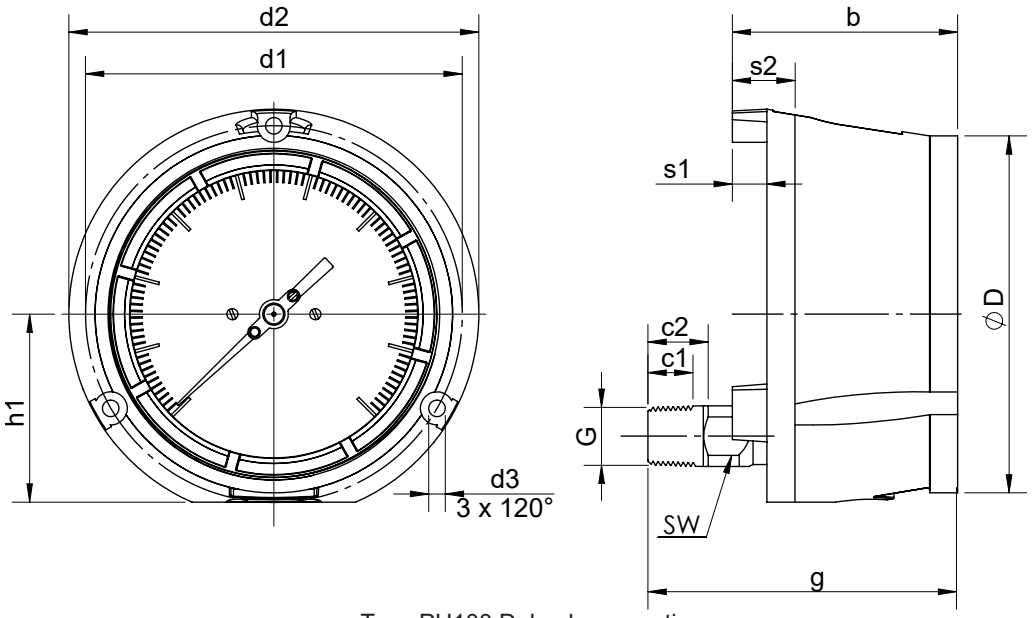

Type PH100 D: back connection

NG	b	c1	c2	d1	d2	d3	⌀D	e	G	g	h1	s1	s2	SW
4.1/2"	82.5	15	20	137	148	6	129	38	½-1/4NPT	105.5	67	12.5	25	22
Dimensions (mm)														

Web: www.pci-instruments.com | Email: sales@pci-instruments.com | Tel: +44 (0)1704 509090