Pressure Gauge For Process Applications
TETROPRESS 300



Benefits
- For chemical and process engineering applications
- Measuring system fully welded to housing
- Extremely robust design
- For temperatures of the medium of up to 200 °C
- Tightness-tested with helium

Application
For corrosive gaseous and liquid media which are not highly viscous and do not crystallise; suitable for corrosive environments.

Technical specifications
Mounting:
- A: bottom connection
- D: back connection
- C: surface mounting, bottom connection
- E: panel mounting, back connection
- B: panel mounting, clamp fixing, back connection

Nominal size: 63 – 100 – 160
Accuracy class (EN 837-1/6)**:** 1,6 - 1,0
Operating temperature range: Medium: Max. 200 °C
Ambient: -20/+60 °C
Degree of protection: IP 65 (EN 60529)
Ranges: See ordering table
Connection: Stainless steel 316L, bottom, centre back or bottom back
Measuring element:
Bourdon tube, stainless steel 316 Ti/316L
≤ 60 bar: "C" type tube
> 60 bar: Helical tube
Tightness-tested with helium
Movement: Stainless steel
Dial: Aluminium, white, Scaling black
Pointer: Aluminium, black
Housing: Stainless steel 304, with blow-out
Bayonet type bezel: Stainless steel 304
Window: Acrylic

Options
- Back flange
- Laminated safety glass
- Panel mounting bezel
- 3-hole fixing, panel mounting bezel
- ATEX version
- Crimped bezel, polished
- Electrical contacts
- Special scales, dual scales
- Mounting centre back
- Other process connections

Available certification
- 2.1 certificate of conformity
- 3.1 material certificate
- Test certificate for indication accuracy
- ATEX 94/9/EC conformity certificate (for ATEX version)

How to order
Please specify: model, mounting, case diameter, range, connection, options, certificates
Example: TP300, A, 100 mm, 0/10 bar, ½" BSPM

Ranges														
bar	-1/0	-1/+0,6	-1/+1,5	-1/3	-1/+5	-1/+9	-1/+15	0/0,6	0/1	0/1,6	0/2,5	0/4	0/6	0/10
	0/16	0/20	0/25	0/40	0/60	0/100	0/160	0/250	0/280	0/300	0/400	0/400	0/1000	0/1600

Web: www.pci-instruments.com | Email: sales@pci-instruments.com | Tel: +44 (0)1704 509090

Technical drawings

Bottom connection (A)

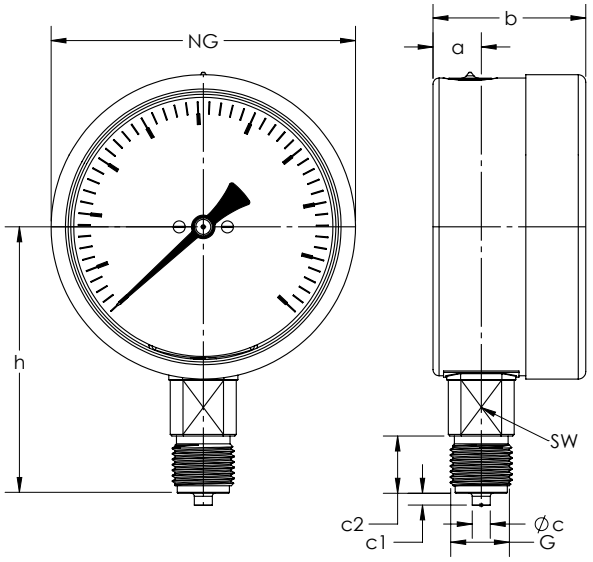

Dimensions (mm)								
NG	a	b	⌀c	c1	c2	G	h	SW
100	15.6	49	6	3	20	G1/2B	86	22
160	17.5	50	6	3	20	G1/2B	116	22

Back connection (D)

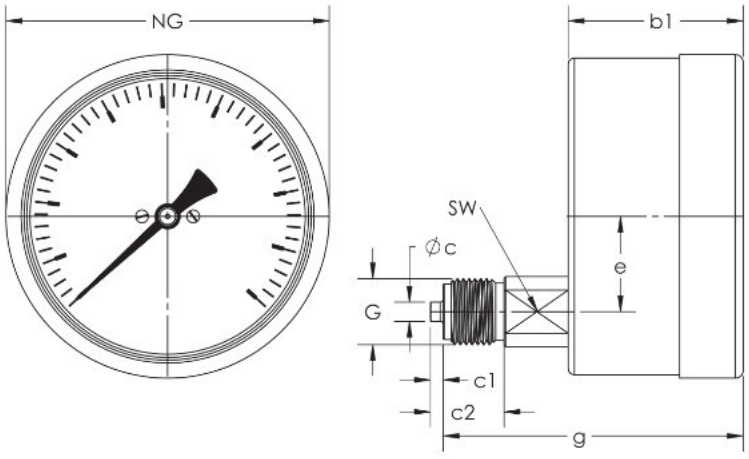

Dimensions (mm)								
NG	b2	⌀c	c1	c2	e	G	g	SW
100	49	6	3	20	34.5	G1/2B	83	22
160	50	6	3	20	34.5	G1/2B	84	22

Web: www.pci-instruments.com | Email: sales@pci-instruments.com | Tel: +44 (0)1704 509090

Bottom connection, back flange (C)

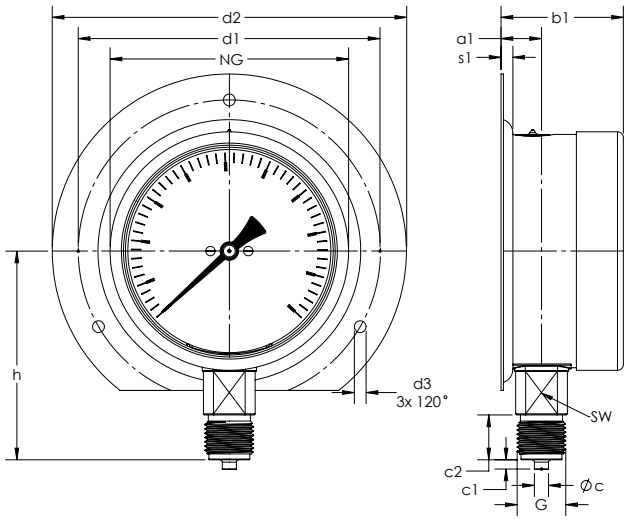

Back connection, 3-hole fixing, panel mounting (E)

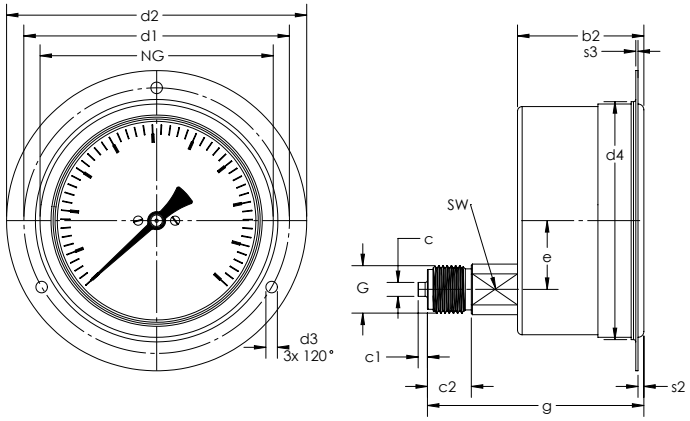

Dimensions (mm)														
NG	b2	⌀c	c1	c2	d1*	d2*	d3*	d4	e	G	g	s2	s3	SW
100	49	6	3	20	116	132	4.8	104	34.5	G1/2B	83	4	2	22
160	50	6	3	20	178	198	5.8	164	34.5	G1/2B	84	4	2	22

Back connection, panel mounting with clamp fixing (B)

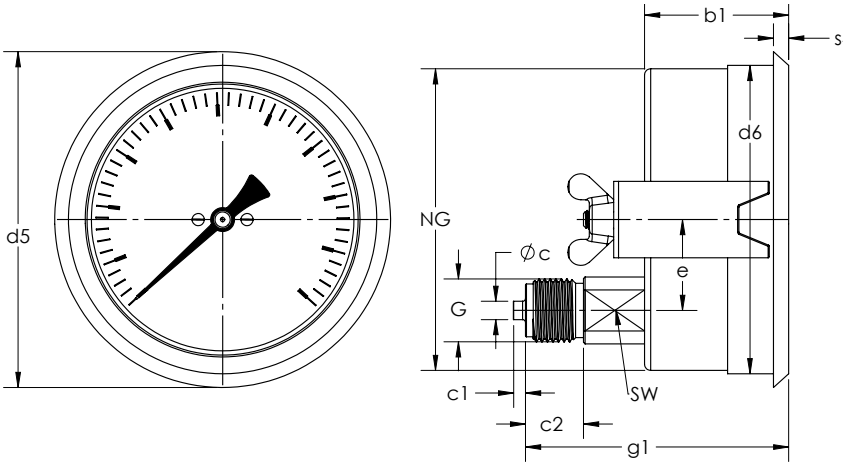

Dimensions (mm)										
NG	b3	⌀c	c1	c2	d5	d6	e	G	g1	s4	SW
100	49	6	3	20	107	101	34.5	G1/2B	83	4	22
160	52	6	3	20	167	161	34.5	G1/2B	86	4.5	22

Web: www.pci-instruments.com | Email: sales@pci-instruments.com | Tel: +44 (0)1704 509090