NY2

Type miniature compact design needle valves are ideal for bubble tight shut-off in applications where space is at a premium. The mini series are available with metal to metal low torque seating (Stem Type YS). Available with end connections in sizes 1/8" to 1/4" and as pipe connections.

Pressure : 200 bar
Max temp. : 240^{0}C
Metal to metal seating Material Stainless Steel
Gland Packing : PTFE
Stem packing area : Burnished mirror finish for smooth valve operation.
Safety : Back seating for preventing stem blowout.



Size	Type	Length	Width	Ht open	Ht closed	Handle
1/8"	FxF	50	22	56	54	40
	MxF	56	22	56	54	40
	MxM	60	22	56	54	40
1/4"	FxF	55	22	56	54	40
	MxF	65	22	56	54	40
	MxM	60	22	56	54	40

All dimensions are in mm

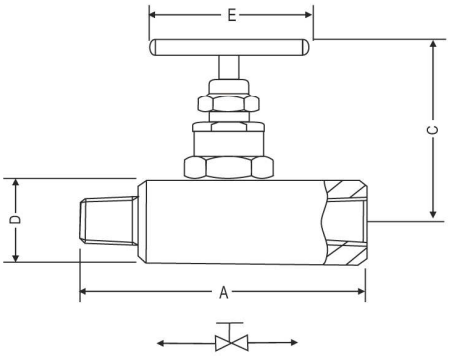

Type MF

Applications

- Instrument air lines
- Control panels
- Air header assemblies
- Gas sampling
- Laboratory equipment
- Instrument isolation
- Control loops
- Gas and liquid service

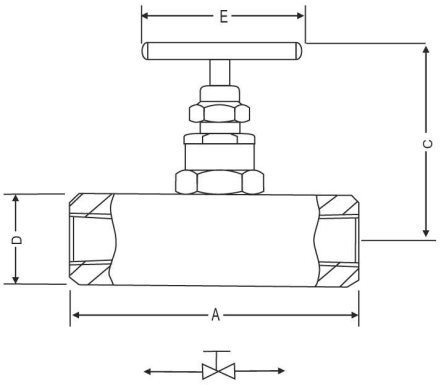

Type FF

Note : Other sizes available on request.

Isolate

Web: www.pci-instruments.com | Email: sales@pci-instruments.com | Tel: +44 (0)1704 509090

How to order : NY2

Miniature Valve

Body Material	Stem Packing	Size = P x P1	Connections	Threads
S = SS 316	P = PTFE	22 = 1/8" x 1/8"	FF = Female x Female	N = NPT to ANSI B1.20.1.
SL = SS 316L		24 = 1/4" x1/4"	MF = Male x Female	P = BSPP to Bs2779
B = Brass			MM = Male x Male	B = BSPT to BS21

Options -

IE : Handle circular plastic.
TF : Sour gas service to NACE standard MR-01-75.
SG: For Oxygen service, valves are supplied cleaned and degreased and suitably packed.
GH: Material test certificate
GO: Hydrotest test certificate

Example

To place an order simply refer to the codes in the table.

Valve Type : Body Material + Stem Packing + Size + Connections + Threads + Option

NY2 : S + P + 24 + FF + N = Final Order

Note -

The weld prepared types are available with a male-or-female plain end - suitable for socket weld, or male butt weld end. Always specify pipe schedule and further requirements when ordering valves for welded or Flange connections. Panel mounting option for installation in racks and panels.

Standard Valve Materials

Valve	Body	Bonnet	Stem	Tip
Carbon Steel	CS A105	SS304	SS316	SS316
Stainless Steel	Ss316	Ss316	Ss316	Ss316

Web: www.pci-instruments.com | Email: sales@pci-instruments.com | Tel: +44 (0)1704 509090