NCET

Needle Valves with compression ends designed for use on general applications requiring complete isolation and throttling of media. offered with bdm designed twin ferrules and nuts are available in imperial and metric sizes. Specially designed conical metal tip press fitted ensures perfect alignment for positive bubble tight shut-off. Available with tube end connections in sizes from 6 mm to 12 mm and 1/4" to 1/2" tube or one end screwed to male or female.

Pressure	:	400 bar
Max temp.	:	240^{0}C
Material	:	Stainless Steel
Stem	:	(CT) Conical tip press fitted hard chrome plated.
Gland Packing	:	PTFE (Grafoil to be used for temperature above 240^{0}C till 550^{0}C)
Stem packing area	:	Burnished mirror finish for smooth valve opera tion.
Safety	:	Back seating for preventing stem blowout.



Type	Length	Width	Ht open	Ht closed	Handle
6M x 6M	65	25	63	60.5	40
8m x 8m	65	25	63	60.5	40
10Mx 10M	65	25	63	60.5	40
12M x 12M	65	32	83.6	79.6	50
1/4" od x 1/4" nptf	65	25	63	60.5	40
3/8" od x 3/8"nptf	65	25	63	60.5	40
1/2" od x 1/2"nptf	65	32	83.6	79.6	50
1/4" od or 6M x 1/4"NPTM	-	25	63	60.5	40
8m x 1/4"NPTM	-	25	63	60.5	40
3/8"od or 10M x 3/8" NPTM	-	25	63	60.5	40
1/2" od or 12M x 1/2" NPTM	-	32	83.6	79.6	50

All dimensions are in mm

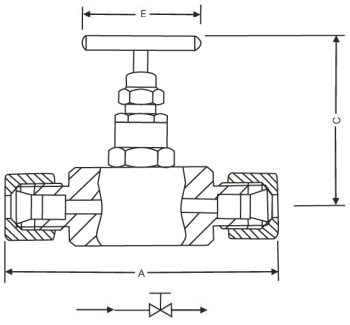

Type TT

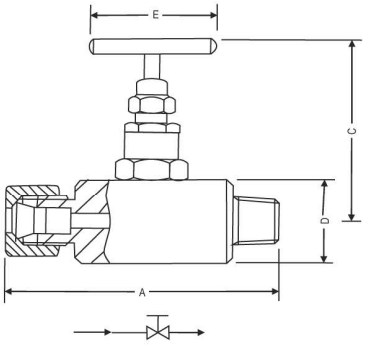

Type TM

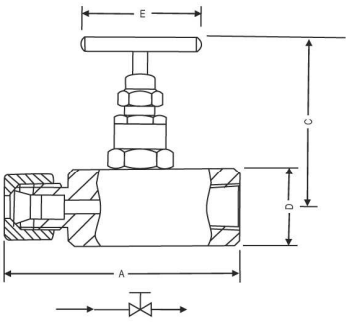

Type TF

Applications

- Instrument isolation
- Media throttling
- **Liquid and vapour service.**

Note : Other sizes available on request.

Isolate

Web: www.pci-instruments.com | Email: sales@pci-instruments.com | Tel: +44 (0)1704 509090

NCEB

Needle Valves with compression ends for use in applications on fluids containing solid particles designed to give high capacity bi-directional flow with reliable bubble tight shut off. The flow path of the valve is easily roddable on viscous fluid application cleaning. Offered with bdm designed twin ferrules and nuts available in imperial and metric sizes. Available with tube end connections in sizes from 6 mm to 12 mm and 1/4" to ½" tube or one end screwed to male or female.

Pressure : 400 bar
Max temp. : 240^{0}C
Stem : Rising Plug(Type BD)
Replaceable soft seat which absorbs contaminants and operates in dirty service, with easy maintenance. Straight through design for high capacity Bi-directional flow and rodding capabilities.
Stem packing area : Burnished mirror finish for smooth valve operation.
Safety : Back seating for preventing stem blowout.



Type	Length	Width	Ht open	Ht closed	Handle
6M x 6M	65	25	64.5	61	40
8m x 8m	65	25	64.5	61	40
10Mx 10M	65	25	64.5	61	40
12M x 12M	65	32	94	87	50
1/4" od x 1/4" nptf	65	25	64.5	61	40
3/8" od x 3/8"nptf	65	25	64.5	61	40
1/2" od x 1/2"nptf	65	32	94	87	50
1/4" od or 6M x 1/4"NPTM	-	25	64.5	61	40
8m x 1/4"NPTM	-	25	64.5	61	40
3/8"od or 10M x 3/8" NPTM	-	25	64.5	61	40
1/2" od or 12M x 1/2" NPTM	-	32	94	87	50

All dimensions are in mm

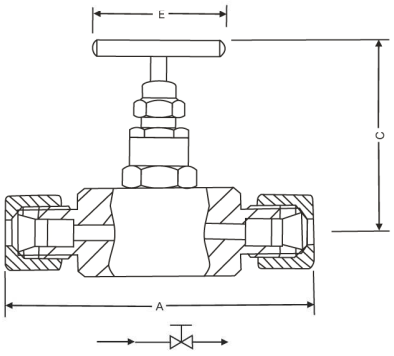

Type TT

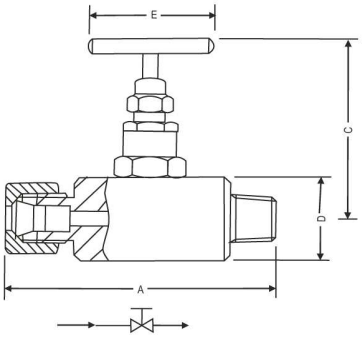

Type TM

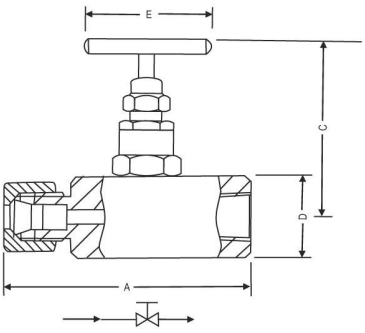

Type TF

Applications

- Instrument isolation
- Media throttling
- Liquid and vapour service.

Note : Other sizes available on request.

Isolate

NCED

Needle Valves with compression end is specially designed for use on general applications requiring complete isolation or throttling of media. Ideal for use on gas services and some liquid applications. offered with bdm designed twin ferrules and nuts available in imperial and metric sizes. Specially designed soft Delrin needle tip rolled into the stem assembly in perfect location for positive bubble tight shut-off. Available with end connections in sizes from 6mm to 12mm and 1/4" to 1/2" tube with one end screwed to male or female.

Pressure : 400 bar
Max temp. : 100°C
Stem : Type (DS) Delrin soft needle tip rolled into the needle.
Material : Stainless Steel
Gland Packing : PTFE
Stem packing area : Burnished mirror finish for smooth valve operation.
Safety : Back seating for Preventing stem blowout.



Type	Length	Width	Ht open	Ht closed	Handle
6M x 6M	65	25	63.5	61	40
8m x 8m	65	25	63.5	61	40
10Mx 10M	65	25	63.5	61	40
12M x 12M	65	32	93.5	89.5	50
1/4" od x 1/4" nptf	65	25	63.5	61	40
3/8" od x 3/8"nptf	65	25	63.5	61	40
1/2" od x 1/2"nptf	65	32	93.5	89.5	50
1/4" od or 6M x 1/4"NPTM	-	25	63.5	61	40
8m x 1/4"NPTM	-	25	63.5	61	40
3/8"od or 10M x 3/8" NPTM	-	25	63.5	61	40
1/2" od or 12M x 1/2" NPTM	-	32	93.5	89.5	50

All dimensions are in mm

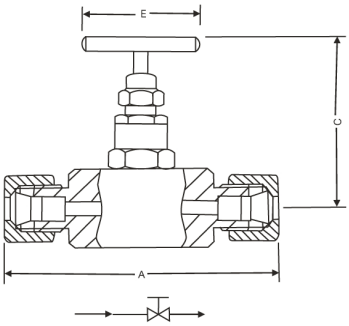

Type TT

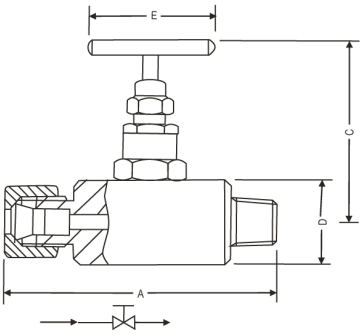

Type TM

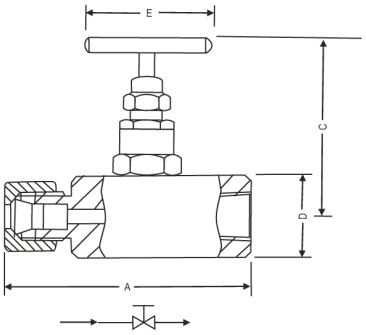

Type TF

Applications

- Instrument isolation
- Media throttling
- Liquid and vapour service.

Note : Other sizes available on request. Please contact factory for more details.

Isolate

How to order : NCET, NCEB, NCED NEEDLE VALVE (Compression end)

Body Material	Stem Packing	Size = P x P1	Connections	Threads
C = Carbon Steel	P = PTFE	6M = 6x6mm OD	TT = Tube x Tube	N = NPT to ANSI B1.20.1.
S = SS 316	G = Grafoil	8M = 8x8mm OD	TM = Tube x Male	P = BSPF to BS2779
SL = SS 316L		10M = 10x10mm OD	TF = Tube x Female	B = BSPT to BS21
M = Monel 400		12M = 12 x 12mm OD		
H = Hastelloy C		4T = 1/4" x 1/4" OD		
B = Brass		6T = 3/8" x 3/8" OD		
		8T = 1/2" x 1/2" OD		
		4 = 1/4"OD x 1/4" thread		
		6 = 3/8"OD x 3/8" thread		
		8 = 1/2"OD x 1/2" thread		

Options -

IE : Handle circular plastic.
TF : Sour gas service to NACE standard MR-01-75.
SG: For Oxygen service, valves are supplied cleaned and degreased and suitably packed.
GH: Material test certificate
GO: Hydrotest test certificate

Example -

To place an order simply refer to the codes in the table.

Valve Type : Body Material + Stem Packing + Size + Connections + Threads = Option

NCET : C + G + 6T + TT + - = Final Order

Note -

The weld prepared types are available with a male-or-female plain end - suitable for socket weld, or male butt weld end. Always specify pipe schedule and further requirements when ordering valves for welded or Flange connections. Panel mounting option for installation in racks and panels.

Standard Valve Materials

Valve	Body	Bonnet	Stem	Tip
Carbon Steel	CS A105	SS304	SS316	SS316
Stainless Steel	SS316	SS316	SS316	SS316
Monel	Alloy 4000	Alloy 4000	Alloy 4000	Alloy 5000
Sour Gas	SS316	SS316	Alloy 4000	Alloy 5000