M5VA With threaded vertical port inlets and outlets. The isolating and venting bonnets are positioned on the left and right hand side and the equalizing bonnet is positioned on the front side. Designed for remote mounting.



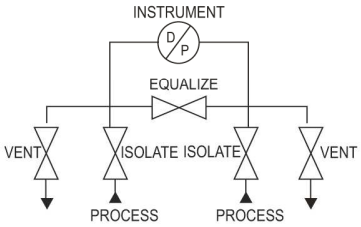

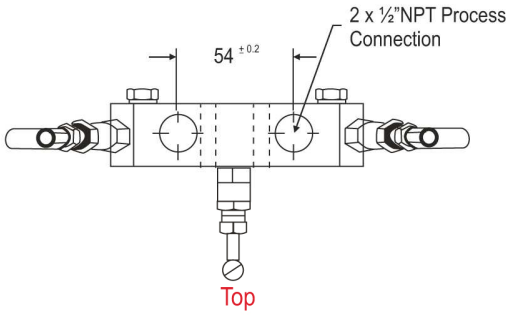

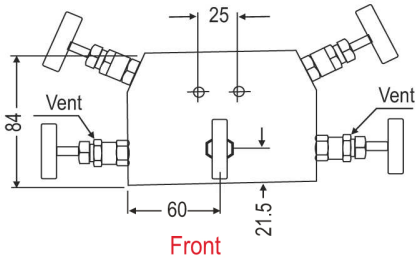

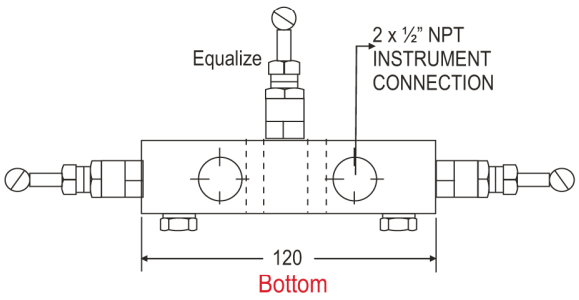

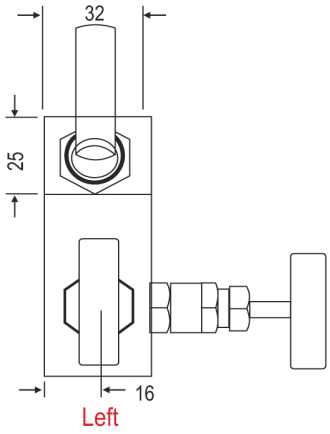

Standard connection

Product	Process side	Instrument side	Vent/Test
M5VA	1/2" NPT female	1/2" NPT female	1/4" NPT female

Web: www.pci-instruments.com | Email: sales@pci-instruments.com | Tel: +44 (0)1704 509090

M5VG

With threaded vertical port inlets and outlets. The vent/test ports are positioned on the bottom and top of the body. The isolating bonnets are positioned on the left and right hand side and the venting and equalizing bonnets are positioned on the front side. Specially designed for remote mounting to field meters, differential transmitters and chart recorders on gas service allowing fail safe configuration preventing pressure loss from the high to low pressure impulse lines.



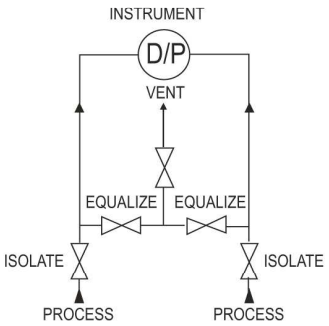

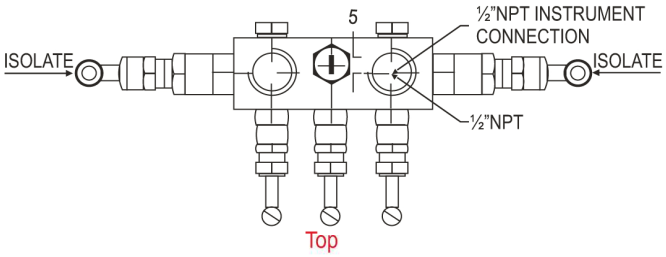

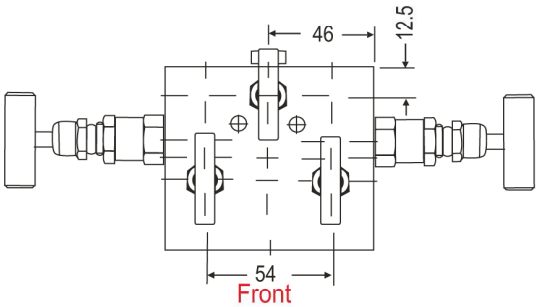

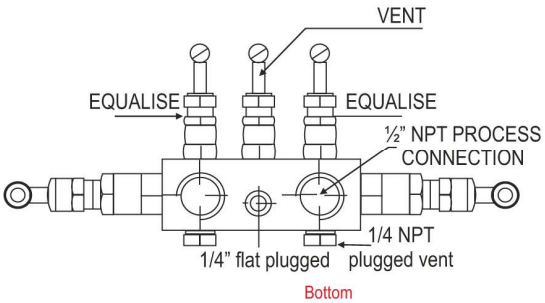

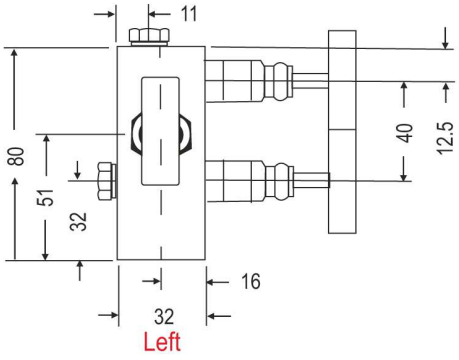

Standard connection

Product	Process Side	Instrument Side	Vent/Test
M5VG	1/2" NPT female	1/2" NPT female	1/4" NPT female

M5VD

Model for differential pressure gauges with 2 inlets NPT female at bottom and 2 outlets with rotating nuts on top side. **Also available in 54mm tap spacings model - M5VD54.**

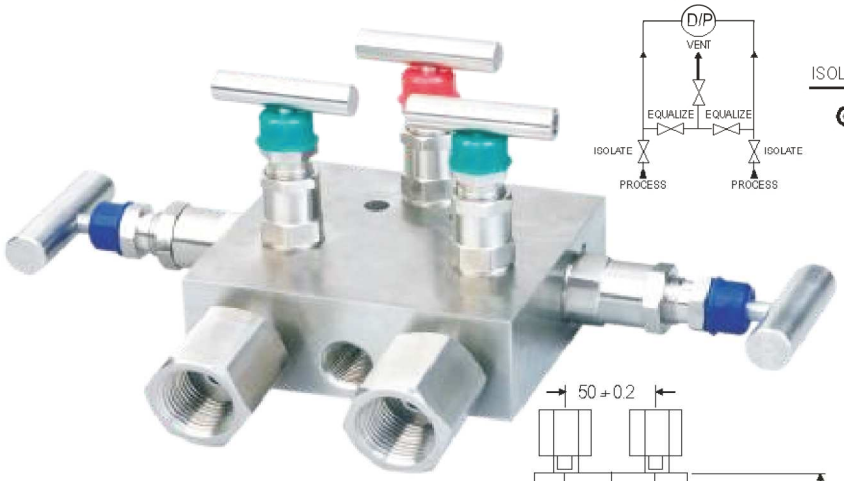

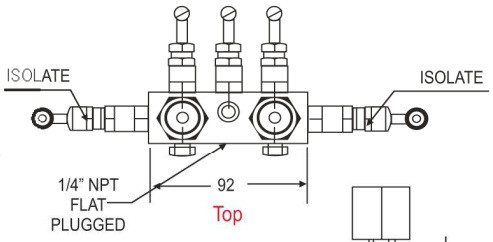

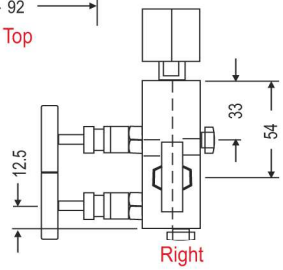

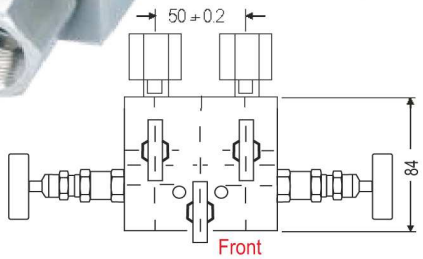

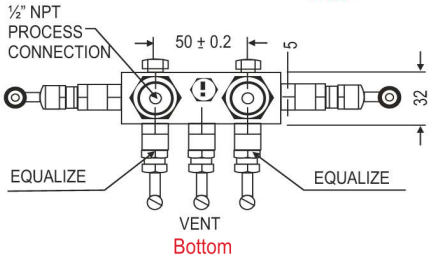

Standard connection

Product	Process side	Instrument side	Vent/Test
M5VD	1/2" NPT female	1/2"BSP Rotatable nuts	1/4" NPT female

M5VQ

Model designed for complete isolation of instruments-2 inlets NPT female at front, 2outlets NPT female at back side. Vent/test connection at front, equalizing bonnets (2) angular top, isolating bonnets at left and right side, venting bonnet angular on top.

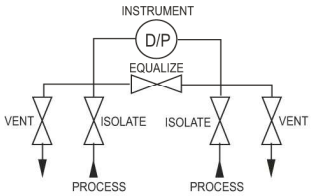

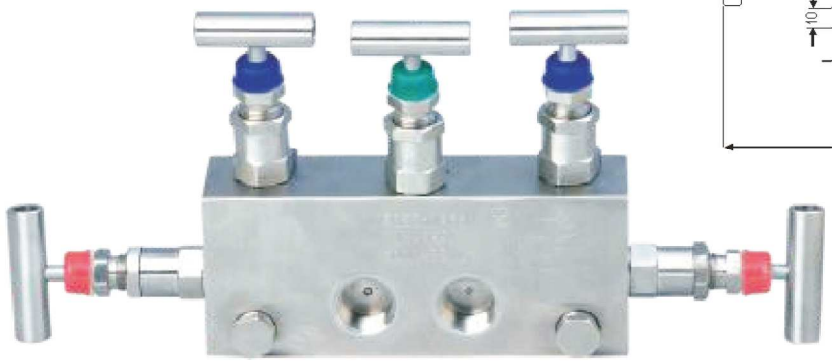

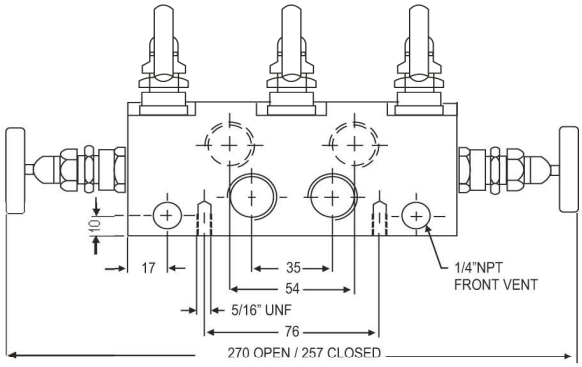

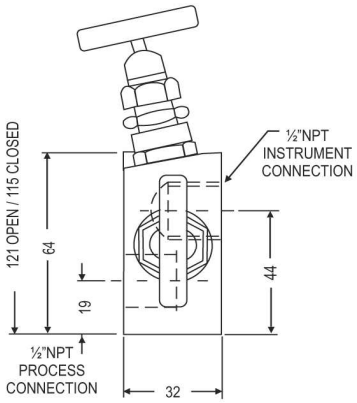

Standard connection

Product	Process Side	Instrument Side	Vent/Test
M5VQ	1/2" NPT female	1/2" NPT female	1/4" NPT female

5VV

Model designed for complete isolation of instruments with NPT female inlets /outlets. Vent/test connection at bottom; equalizing bonnet angular on top-isolating bonnets angular on top venting bonnets at left and right side.



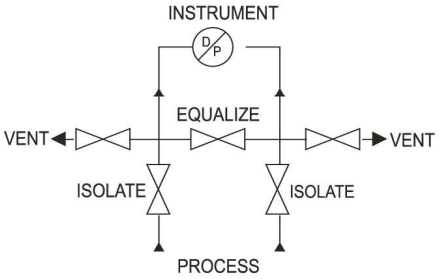

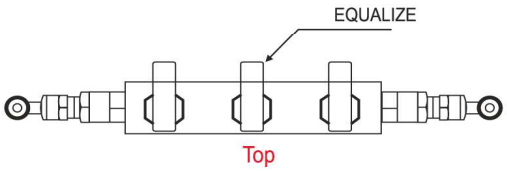

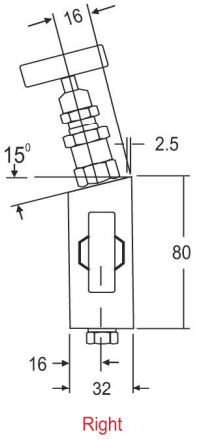

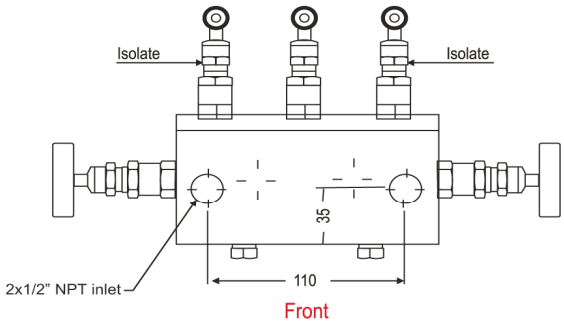

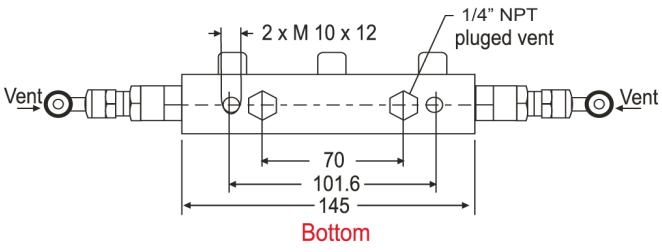

Standard connection

Product	Process Side	Instrument Side	Vent/Test
5VV	1/2" NPT female	1/2" NPT female	1/4" NPT female

M5VR With threaded female ports on front side and back side for instrument and process connections. The two vent bonnets along with equalizing bonnet are positioned on the top side. The two isolation bonnets are positioned on left and right hand sides.



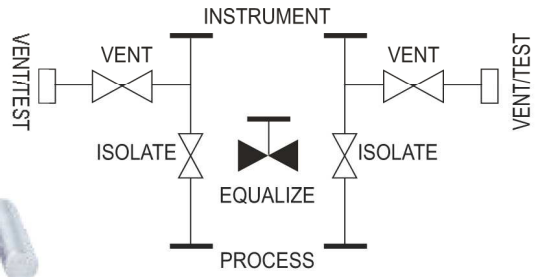

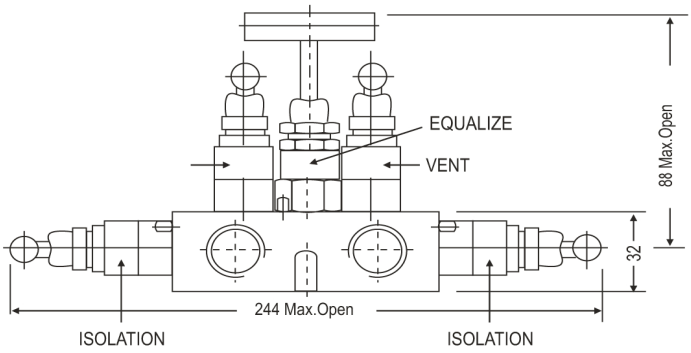

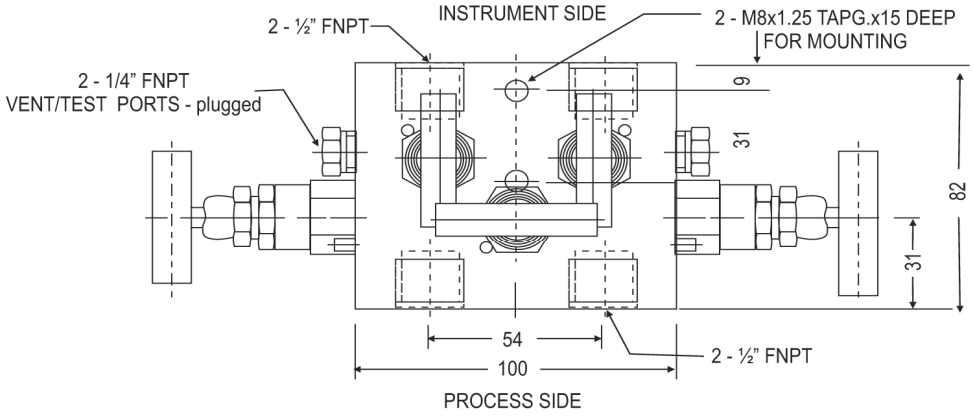

Standard connection

Product	Process Side	Instrument Side	Vent/Test
M5VR	1/2" NPT female	1/2" NPT female	1/4" NPT female

Standard version specifications of model M5VA, M5VG, M5VD, M5VQ, M5VV, M5VR

Body	:	SS 316
Stem	:	SS 316
Valve assembly	:	SS 316
'T' bar handle	:	SS 304
Maximum working pressure	:	6000 psi
Maximum working temperature:		240°C
Packing	:	PTFE (Grafoil to be used for temperature above 240°c till 550°c)
Type of stem	:	Type CT; Stem with conical metal tip
Drain port	:	1/4" NPT [F]; provided with SS 316 plug
Bracket mounting holes	:	2 Nos.
Chrome plating	:	Provided on stem tip.

How to order : Valve Type - M5VA, M5VG, M5VD, M5VQ, M5VV, M5VR

Body Material	Stem Type	Stem Packing	Size = Inlet x Outlet	Connections	Threads
C = Carbon Steel	CT	P = PTFE	44= 1/2" x 1/2" (std)	FF = Female x Female	N = NPT to ANSI B1.20.1
S = SS 316	DS	G = Grafoil	24 = 1/4" x 1/4"	FR = Female x Female Rotating	P = BSPF to BS2779
SL = SS 316L				SW = Socket weld	B = BSPT to Bs21
M = Monel 400					
H = Hastellogy C					

Options

- GH : Material test certificate
- GO : Hydrotest test certificate
- IE : Circular plastic.
- TF : Sour gas service to NACE standard MR-01-75.
- SG : Oxygen service. (manifolds are supplied cleaned and degreased)
- DS : Valves with stem having soft conical and delrin tip rolled into the needle for gas service.
- MB : Mounting bracket
- MBC : Mounting bolts [7/16" UNF] in carbon steel
- MBS : Mounting bolts [7/16" UNF] in SS

Example

To place an order simply refer to the codes in the table.

Valve Type	+	Body Material	+	Stem Type	+	Stem Packing	+	Size	+	Connections	+	Threads	+	Options
M5VA	+	S	+	CT	+	P	+	44	+	FF	+	N	=	Final Order

NOTE:

- The weld prepared types are available with female plain end - suitable for socket weld.
- Anti-tamper bonnet - special design on request with locking arrangement if desired.

M5VP With threaded horizontal port inlets and Flange port outlets. Three vent/test connections are pos itioned on the bottom of the body. The isolating, venting and equalizing bonnets are angular positioned on the top designed direct mounting.

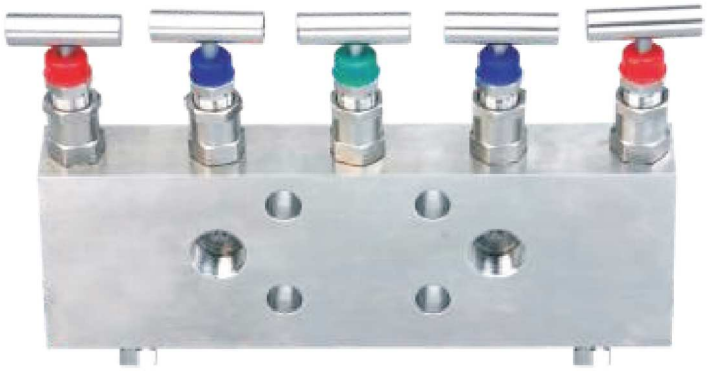

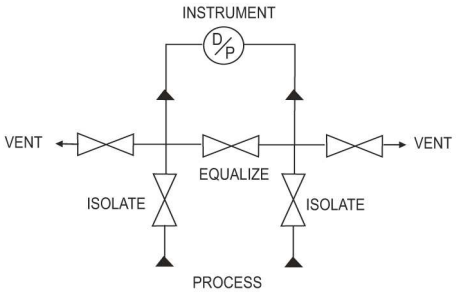

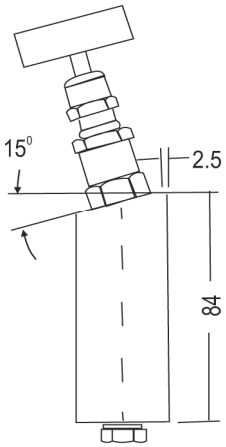

Right

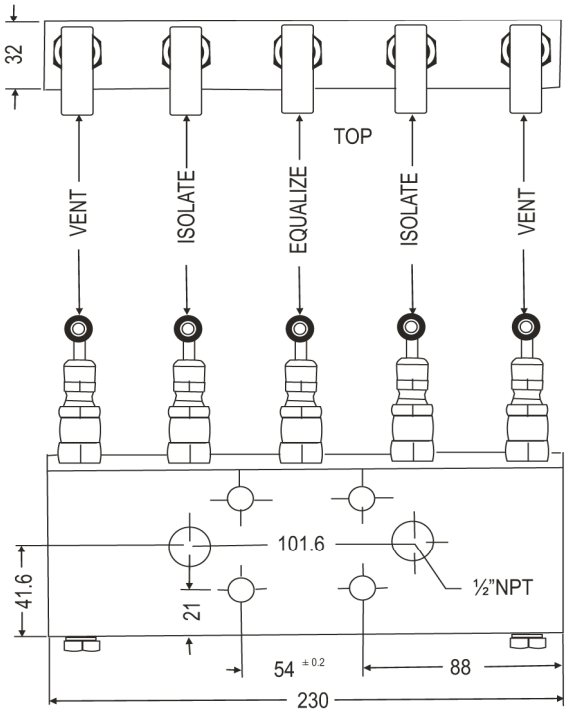

Front

Standard connection

Product	Process Side	Instrument Side	Vent/Test
M5VP	1/2" NPT female	flange	1/4" NPT female

M5VS With threaded horizontal port inlets and Flange outlets. Two vent/test connections are positioned on the bottom of the body. The isolating and equalizing bonnets are angular positioned on the top side. The vending bonnets are positioned on the left & right hand side. Designed for direct mounting.

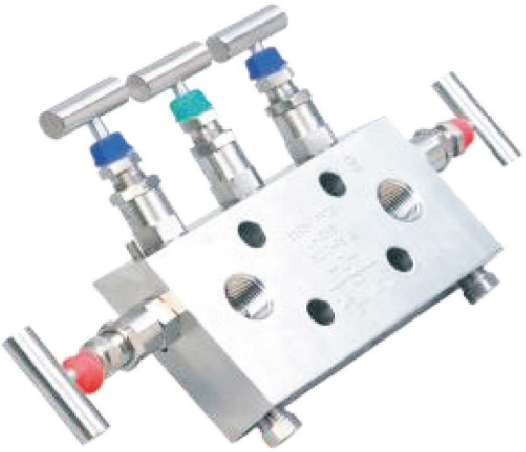

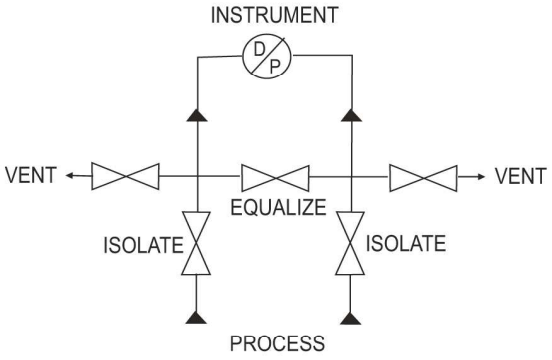

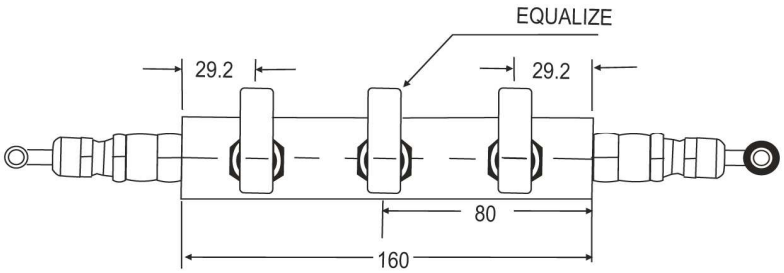

Top

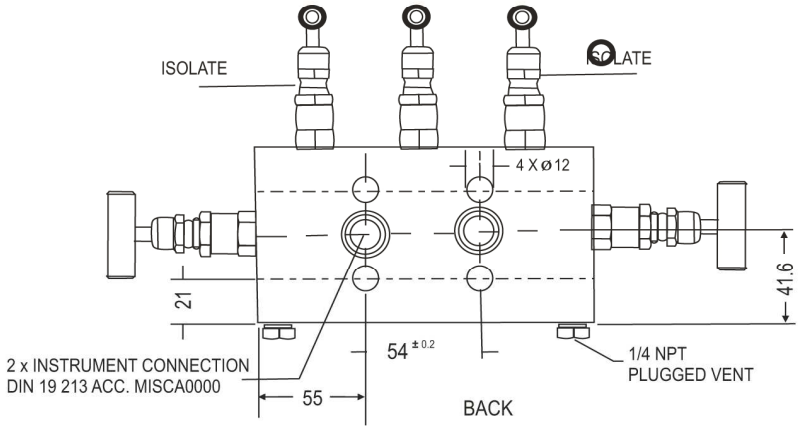

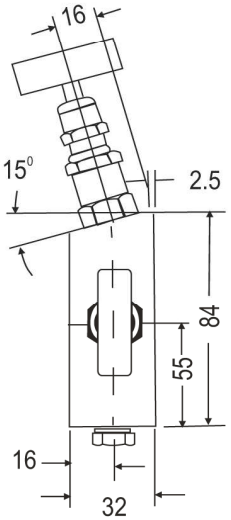

Right

Standard connection

Product	Process side	Instrument side	Vent/Test
M5VS	1/2" NPT female	flange	1/4" NPT female

Standard version specifications of model M5VP, M5VS

Body	:	SS 316
Stem	:	SS 316
Valve assembly	:	SS 316
'T' bar handle	:	SS 304
Maximum working pressure	:	6000 psi
Maximum working temperature	:	240°C
Packing	:	PTFE (Grafoil to be used for temperature above 240°C till 550°C)
Type of stem	:	Type CT; Stem with conical metal tip
Drain port	:	1/4" NPT [F]; provided with SS 316 plug
Chrome plating	:	Provided on stem tip.

How to order : Valve Type - M5VP, M5VS

Body Material	Stem Type	Stem Packing	Size = Inlet x Outlet	Connections	Threads
C = Carbon Steel	CT(std)	P = PTFE(std)	2F = 1/4" x Flange	FD = Female x Flange(54mm)	N = NPT to ANSI B1.20.1
S = SS 316(std)	DS	G = Grafoil	4F= 1/2" x Flange	SW = Socket Weld	P = BSPPto BS2779
SL = SS 316L					B = BSPT to BS21
M = Monel 400					
H = Hastelloy C					

Options

- GH : Material test certificate
- GO : Hydrotest test certificate
- MBC : Mounting bolts available [7/16" UNF] in carbon steel
- MBS : Mounting bolts available [7/16" UNF] in SS
- IE : Circular plastic.
- TF : Sour gas service to NACE standard MR-01-75.
- SG : Oxygen service. (manifolds are supplied cleaned and degreased)
- DS : Valves with stem having soft conical and delrin tip rolled into the needle for gas service.
- MB : Mounting bracket

Example

To place an order simply refer to the codes in the table.

Valve Type	+	Body Material	+	Stem Type	+	Stem Packing	+	Size	+	Connections	+	Threads	+	Options
M5VP	+	S	+	CT	+	P	+	4F	+	FD	+	N	=	Final Order

NOTE:

- The weld prepared types are available with female plain end - suitable for socket weld.
- Anti-tamper bonnet - special design on request with locking arrangement if desired.

M5VN

Five Valve Manifold Special model to accommodate any half DIN 19213 interface complaint pressure transmitter. 2 inlets NPT female at front and 2 outlets Flange at back side DIN 19213. Vent/teat connection at front, equalizing bonnets at top side, isolating bonnets at left and right side-venting bonnet at top.



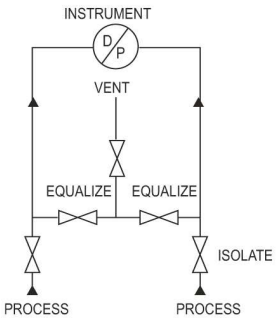

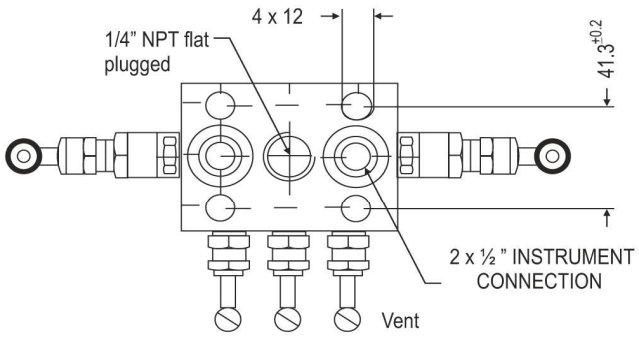

Back

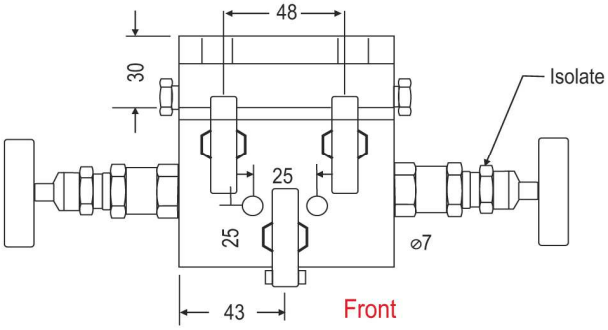

Front

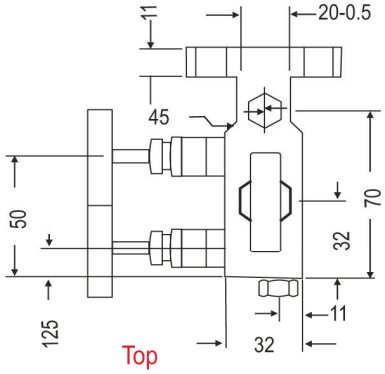

Top

Standard connection

Product	Process Side	Instrument Side	Vent/Test
M5VN	1/2" NPT female	flanged	1/4" NPT female

M5VT With threaded horizontal port inlets and Flange port outlets. The vent/test ports are positioned on the bottom side. The isolating and venting bonnets are positioned on the left and right hand side and the equalizing bonnet is positioned on the top side. Designed for direct mounting.



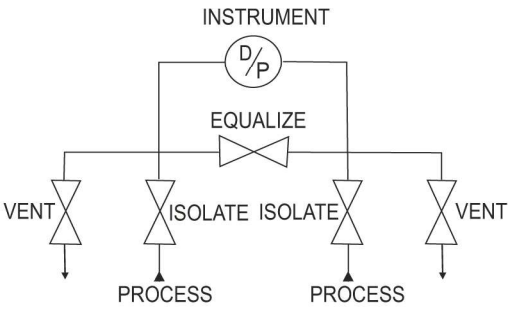

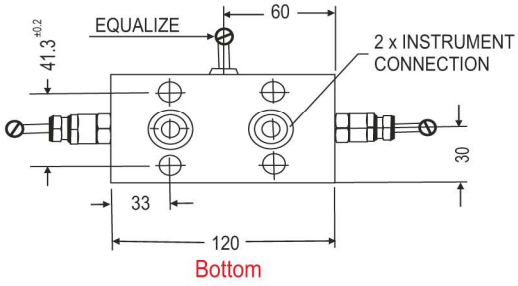

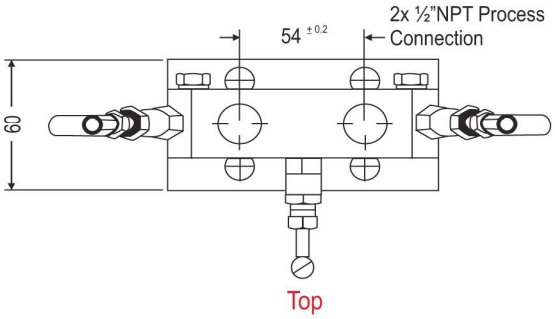

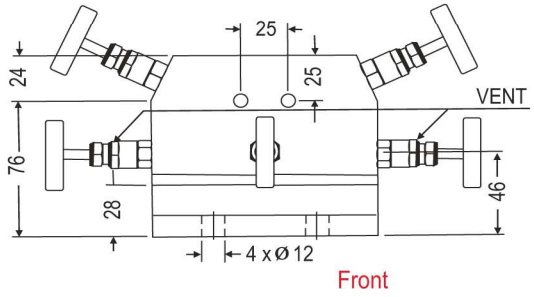

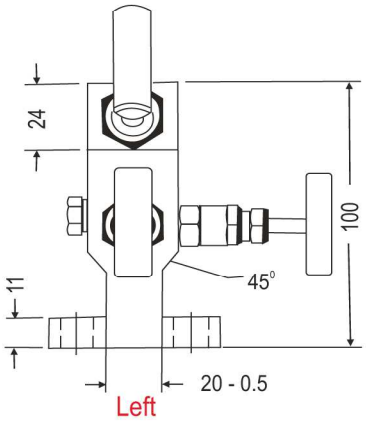

Standard connection

Product	Process Side	Instrument Side	Vent/Test
M5VT	1/2" NPT female	flanged	1/4" NPT female

M5VK

With threaded female ports on front side for instrument connection along with extended Flange for process connection. The two vent bonnets along with equalizing bonnet is positioned on the top side. The two isolation bonnets are positioned on left and right hand sides.

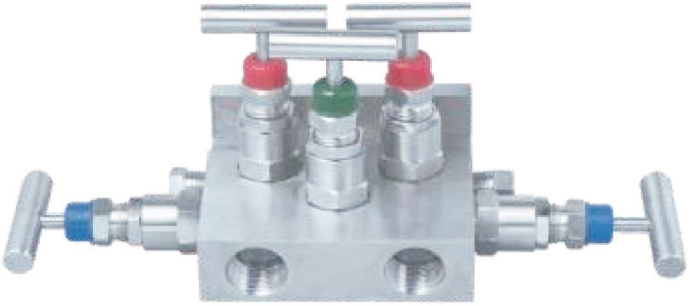

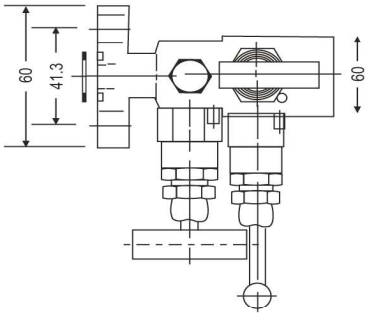

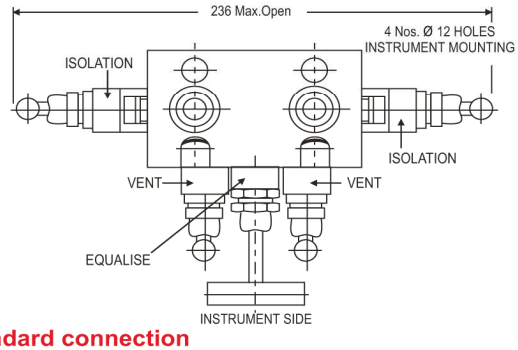

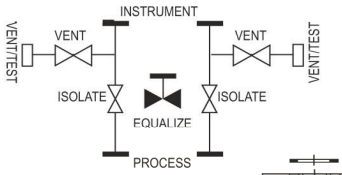

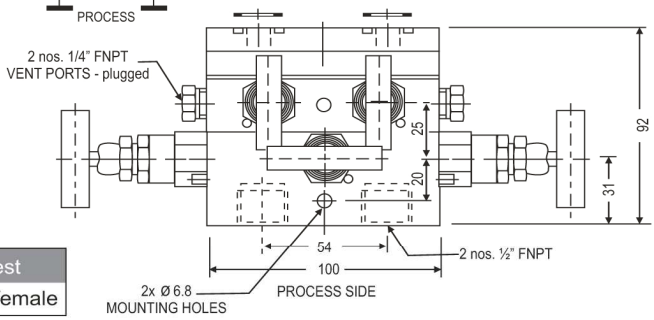

Standard connection

Product	Process Side	Instrument Side	Vent/Test
M5VK	1/2" NPT female	Flange	1/4" NPT female

M5VH

With Flange horizontal port inlets and Flange port outlets. The vent/test ports are positioned on the bottom side.The isolating and venting bonnets are positioned on the left and right hand side and the equalizing bonnet is positioned on the top side. Designed for direct mounting.

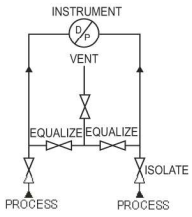

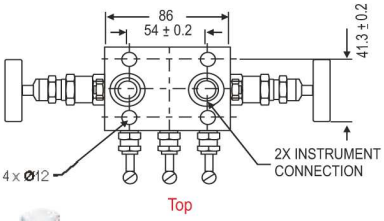

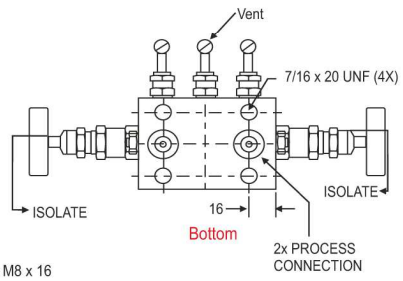



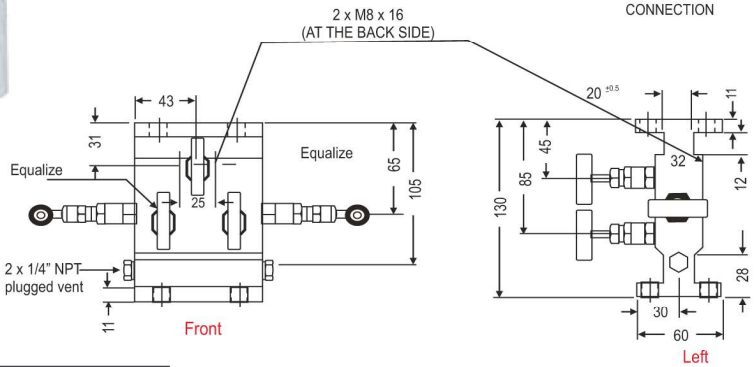

Standard connection

Product	Process Side	Instrument Side	Vent/Test
M5VH	Flange	Flange	1/4" NPT female

Standard version specifications of model M5VN, M5VT, M5VK, M5VH

Body	:	SS 316
Stem	:	SS 316
Valve assembly	:	SS 316
'T' bar handle	:	SS 304
Maximum working pressure	:	6000 psi
Maximum working temperature	:	240°C
Packing	:	PTFE (Grafoil to be used for temperature above 240°C till 550°C)
Type of stem	:	Type CT; Stem with conical metal tip
Drain port	:	1/4" NPT [F]; provided with SS 316 plug
Chrome plating	:	Provided on stem tip.

How to order : Valve Type - M5VN, M5VT, M5VK, M5VH

Body Material	Stem Type	Stem Packing	Size = Inlet x Outlet	Connections	Threads
C = Carbon Steel	CT(std)	P = PTFE(std)	4F= 1/2" x Flange	FD = Female x Flange (54mm)	N = NPT to ANSI B1.20.1
S = SS 316(std)	DS	G = Grafoil	FF= Flange x Flange	DD = Flange x Flange	P = BSPPto BS2779
SL = SS 316L			2F = 1/4" x Flange	SW = Socket Weld	B = BSPT to BS21
M = Monel 400					
H = Hastelloy C					

Options

- GH : Material test certificate
- GO : Hydrotest test certificate
- MBC : Mounting bolts available [7/16" UNF] in carbon steel
- MBS : Mounting bolts available [7/16" UNF] in SS
- IE : Circular plastic.
- TF : Sour gas service to NACE standard MR-01-75.
- SG : Oxygen service. (manifolds are supplied cleaned and degreased)
- DS : Valves with stem having soft conical and delrin tip rolled into the needle for gas service.
- MB : Mounting bracket

Example

To place an order simply refer to the codes in the table.

Valve Type + Body Material + Stem Type + Stem Packing + Size + Connections + Threads + Options

M5VN + S + CT + P + 4F + FD + N = Final Order

NOTE:

- The weld prepared types are available with female plain end - suitable for socket weld.
- Anti-tamper bonnet - special design on request with locking arrangement if desired.

M5V45

Special Five Valve Manifold designed to suit FR 3051 transmitters - inlet NPT female at front - outlet Flange to DIN 19213 at back side - vent/test connection at back, eualizing bonnet on top; isolating bonnets at left and right hand side; venting bonnets angular at left and right side.

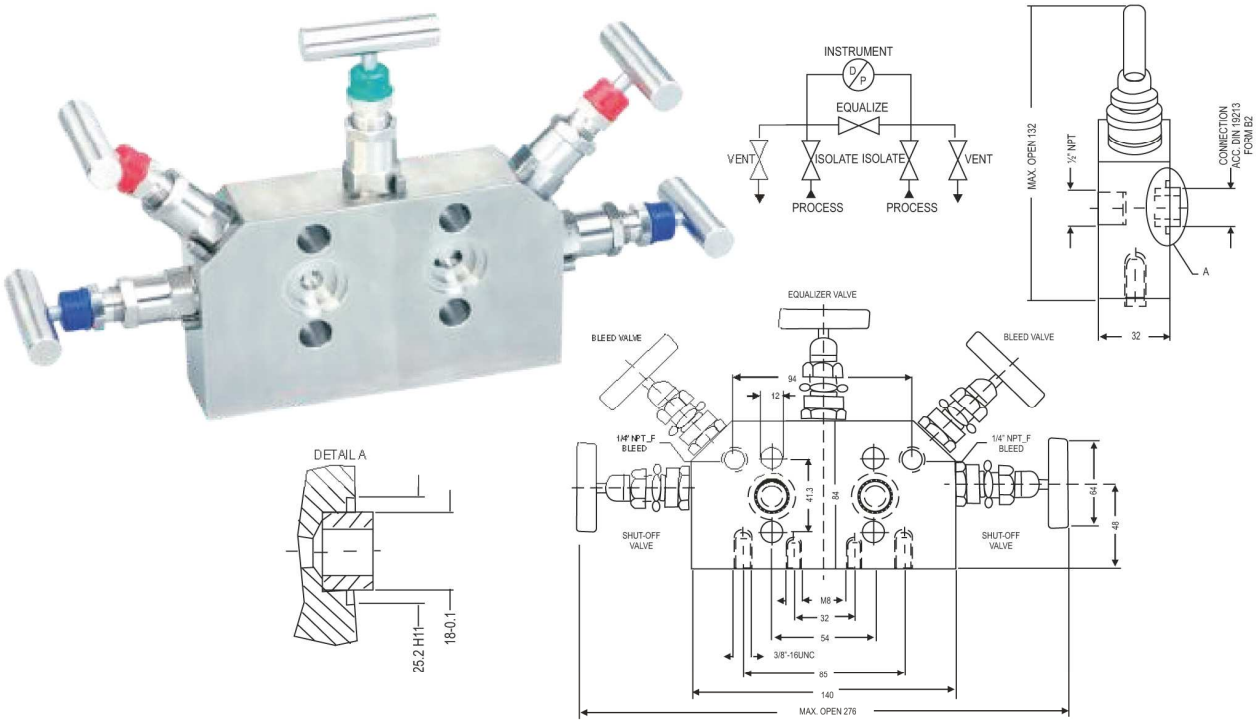

M5VZ

Special Five Valve Manifold with threaded inlet and outlet ports. The isolating, equalizing and vent bonnets are all positioned on top.

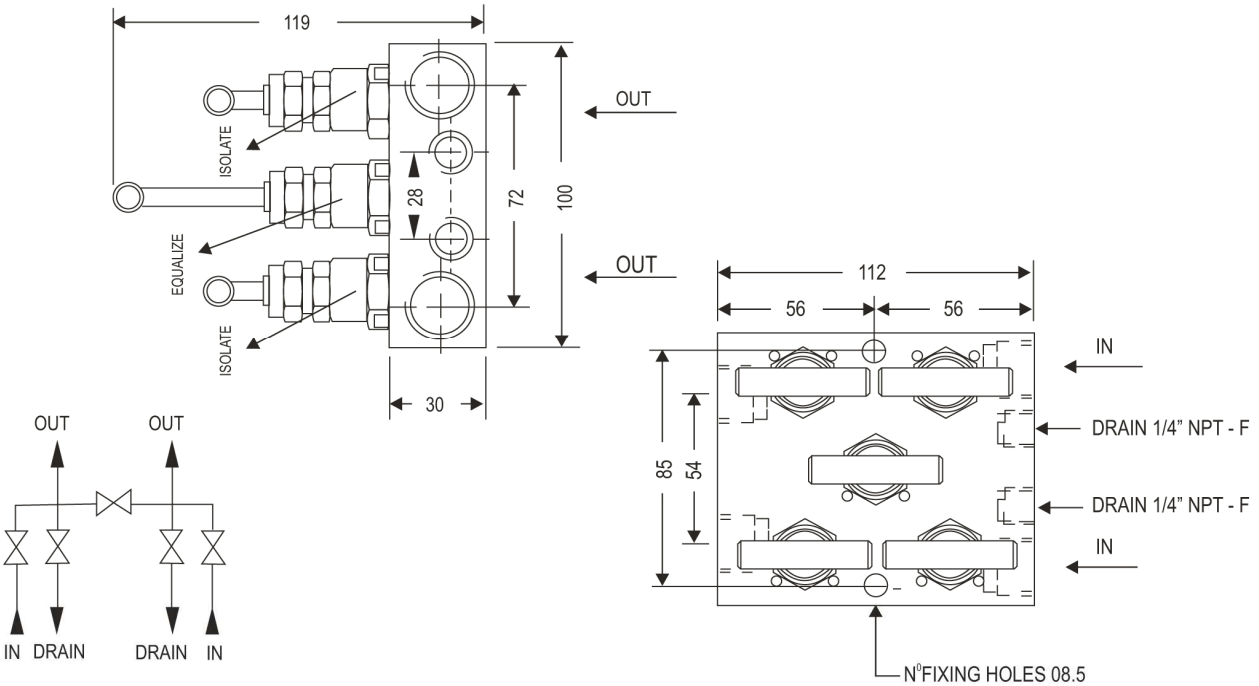

Web: www.pci-instruments.com | Email: sales@pci-instruments.com | Tel: +44 (0)1704 509090

MF27G **Special Monoflange instrument manifold** with needle type pattern valve with non rotating spindle tip for positive bubble tight shut of function. Inlet 150/600# Flange, outlet NPT oe BSP rotable. Vent/test connection NPT female, isolating bonnet on right and venting bonnet at left-instrument connection on top or side (multifunctional)



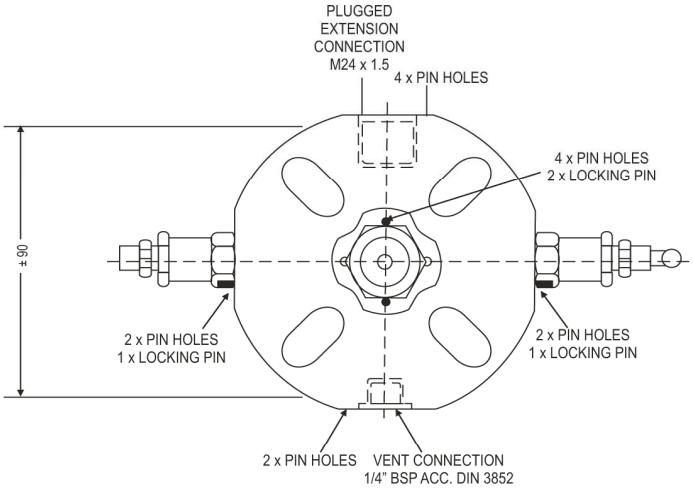

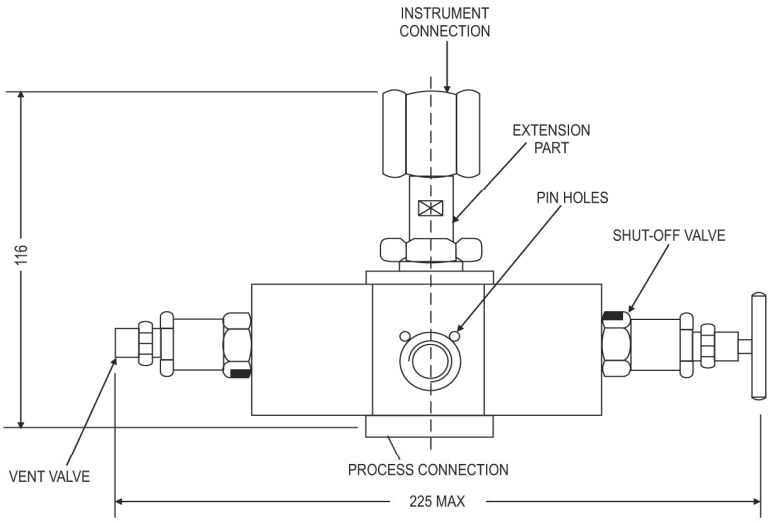

MF28S

Special Monoflange instrument manifold with needle type pattern valve with non rotating spindle tip for positive bubble tight shut off function. Inlet 150/600# Flange, outlet NPT or BSP rotable. Vent/test connection NPT female, isolating bonnet on right and venting bonnet at left - instrument connection on top or side (multifunctional). It is supplied with a built in syphon tube system.



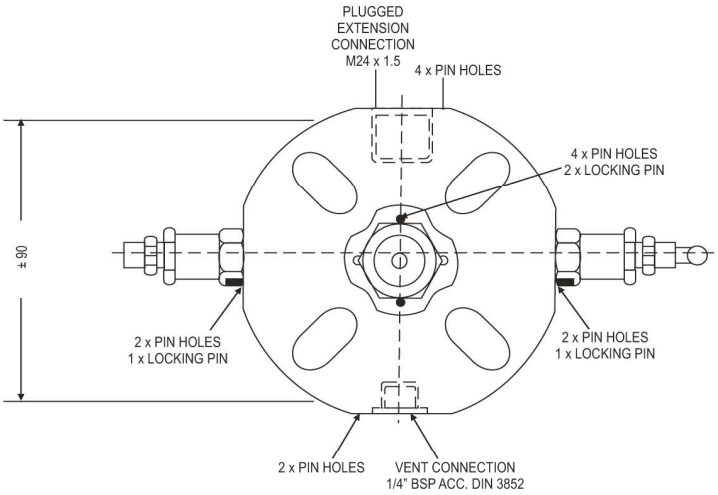

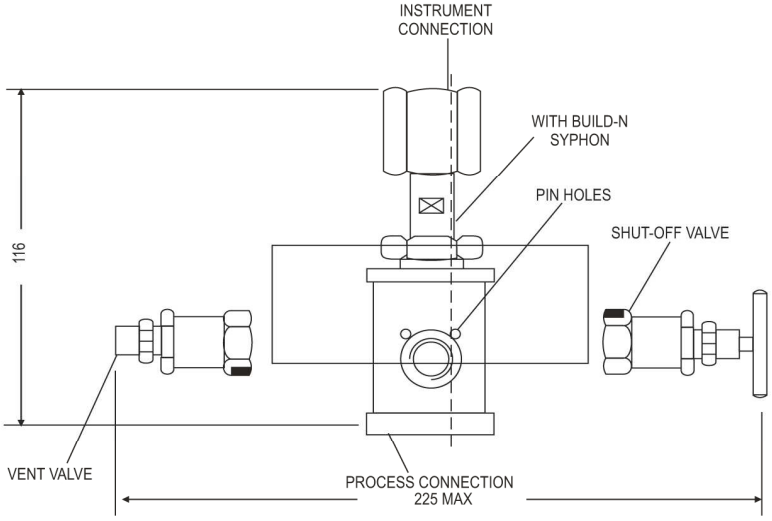

MF29G

Special Monoflange instrument manifold with needle type pattern valve with non rotating spindle tip for positive bubble tight shut off function. Inlet 150/600# Flange, outlet NPT or BSP rotable. Vent/test connection NPT female, isolating bonnet on right and venting bonnet at left - instrument connection on top or side (multifunctional). It is supplied with INLET Flange 900/2500#



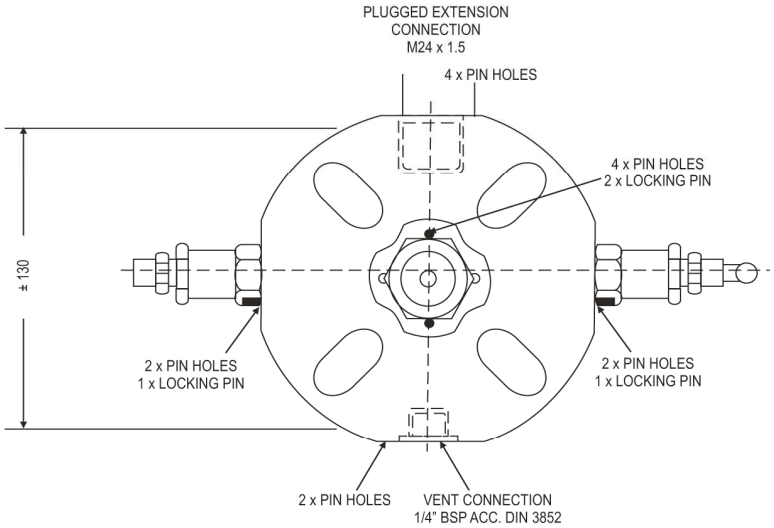

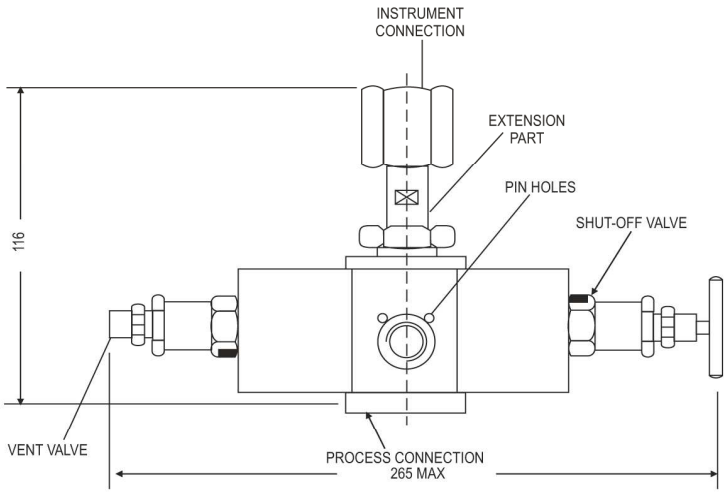

MB 1

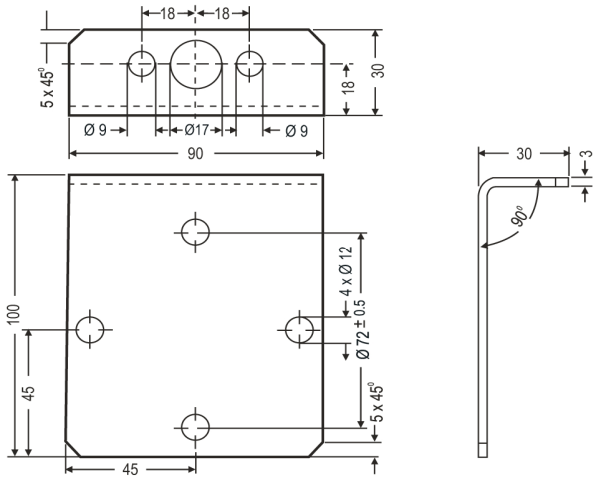

Mounting bracket for :

M2VF

MB 2

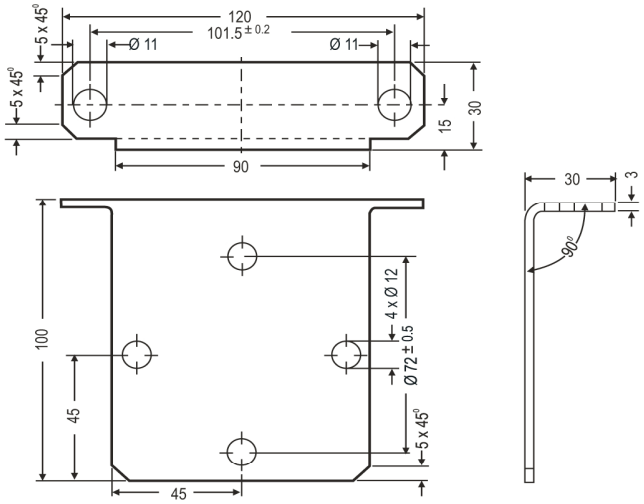

Mounting bracket for :

M3VO
M3VP
M5VP
M5VS

MB 3

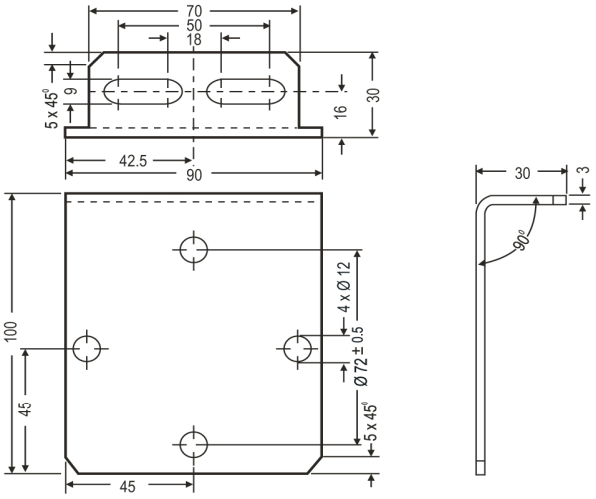

Mounting bracket for :

MSVH
MSVV
M2VA
M2VH
M3VA
M3VB
M3VD
M3VH
M3VT
M5VA
M5VG
M5VH
M5VN
M5VT

Mounting bracket set will be delivered with 2" U-bolt and nuts.