M2VH With threaded horizontal port inlet, outlet and vent/test connection on the left hand side. The venting bonnet is positioned on the top and the isolating bonnet on the front.

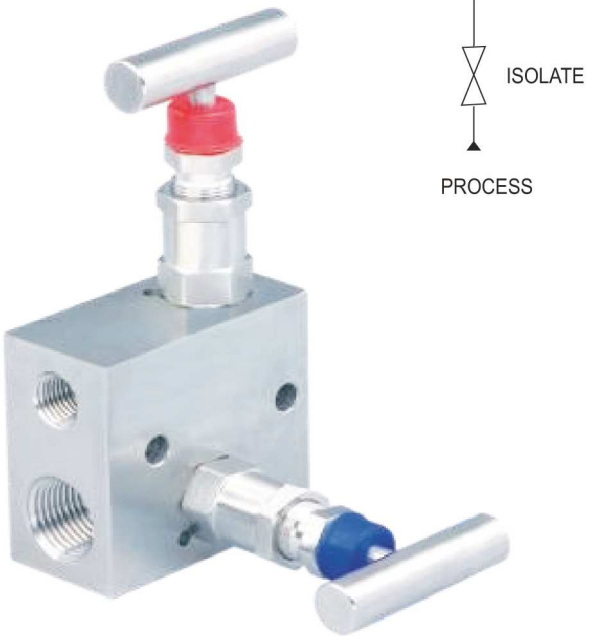

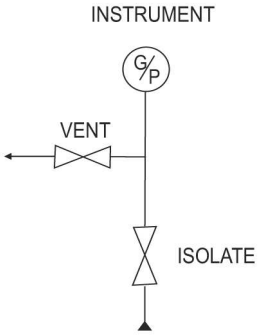

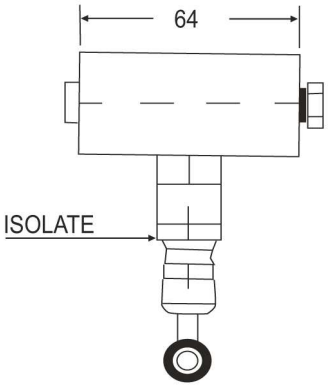

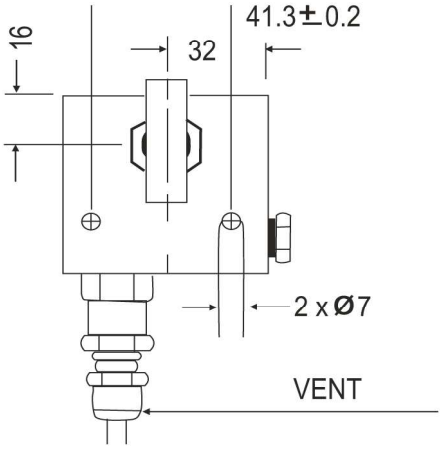

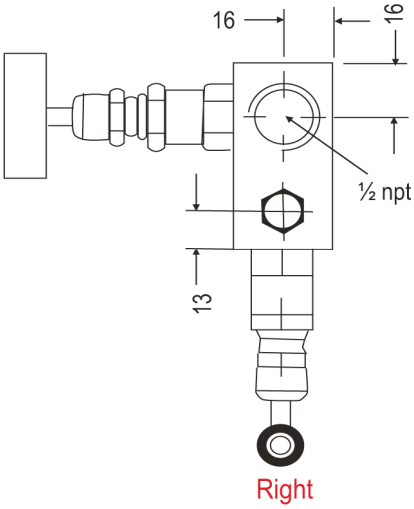

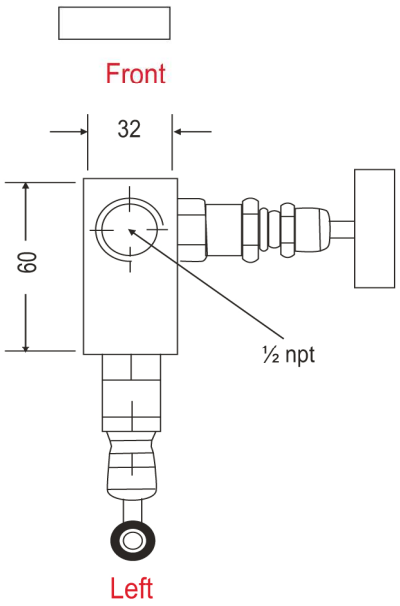

Standard connection

Product	Process side	Instrument side	Vent/Test
M2VH	1/2" NPT female	1/2" NPT female	1/4" NPT female

Web: www.pci-instruments.com | Email: sales@pci-instruments.com | Tel: +44 (0)1704 509090

M2VT With threaded vertical port inlet and female outlet. The vent/test connection is positioned on the front side. The venting bonnet is positioned on the right hand side and the isolating bonnet on left hand side.



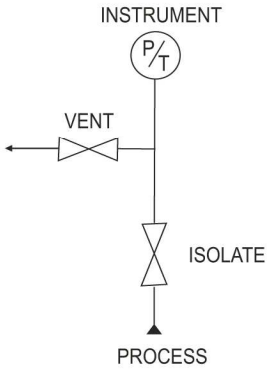

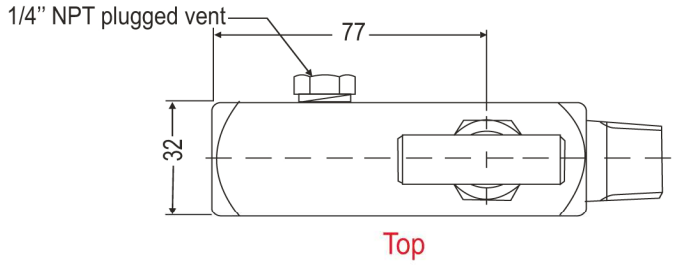

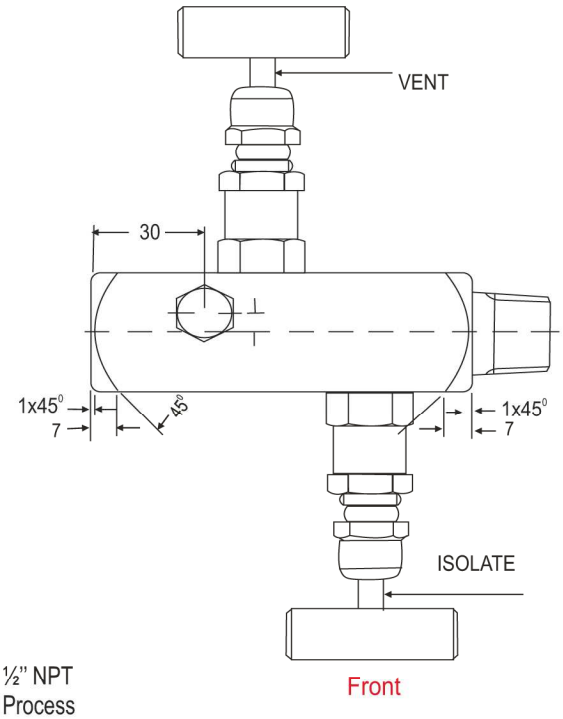

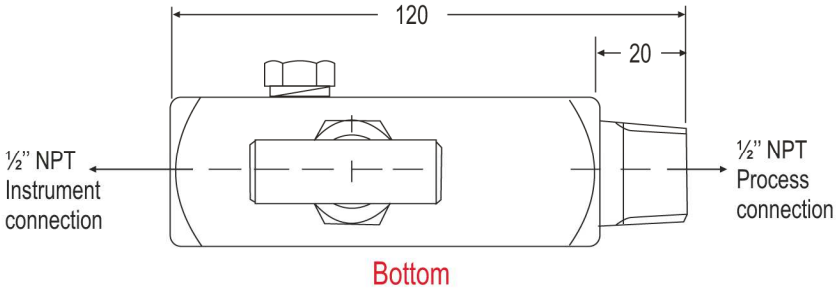

Standard connection

Product	Process side	Instrument side	Vent/Test
M2VT	1/2" NPT male	1/2" NPT female	1/4" NPT female

M2VA

With threaded horizontal port inlet and outlet and vent/test connection on the right hand side. The venting bonnet is positioned angular on the top and the isolating bonnet on the front.



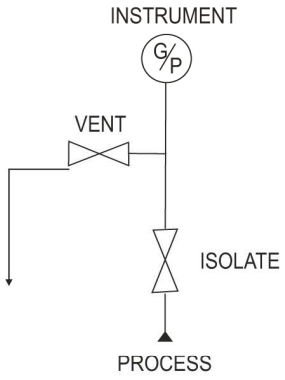

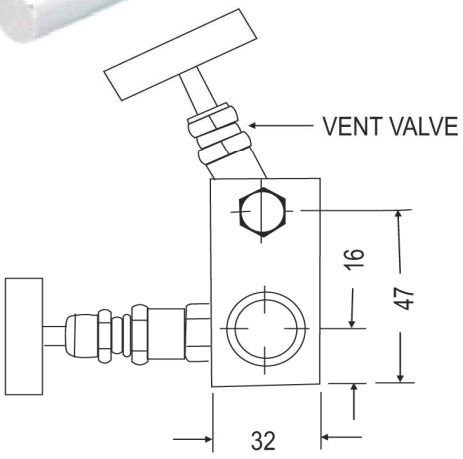

Right

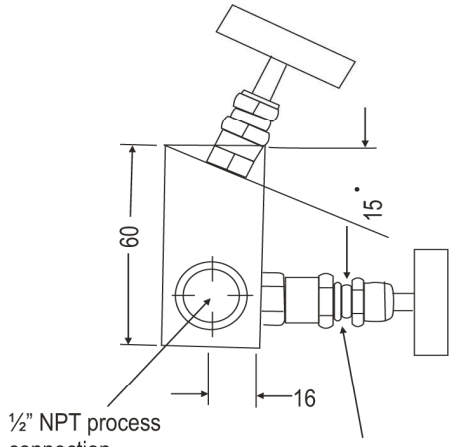

Left

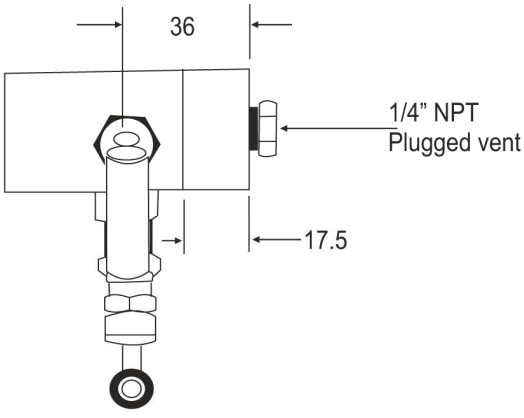

Top

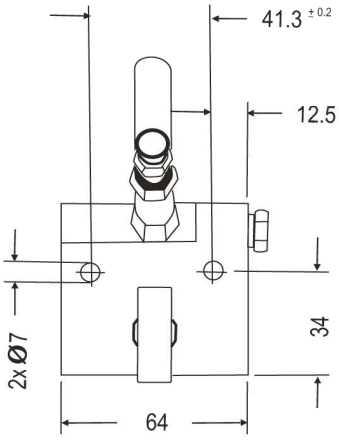

Front

Standard connection

Product	Process side	Instrument side	Vent/Test
M2VA	1/2" NPT female	1/2" NPT female	1/4" NPT female

Web: www.pci-instruments.com | Email: sales@pci-instruments.com | Tel: +44 (0)1704 509090

M2VTF With the vent is positioned near the male instrument connection side.

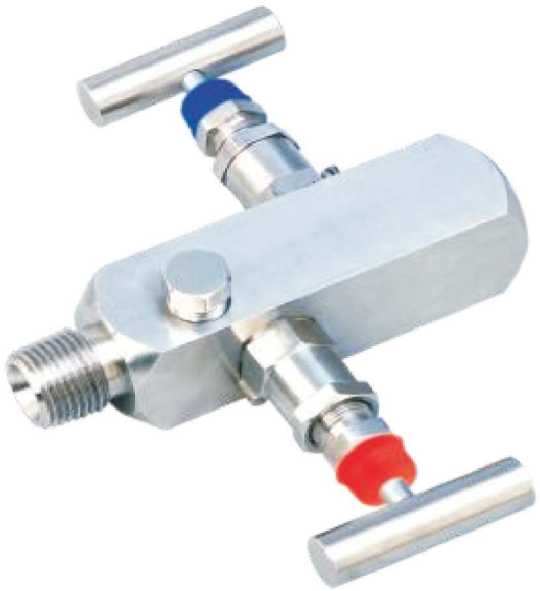

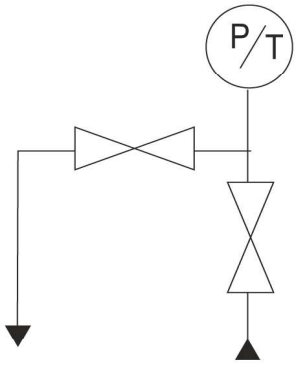

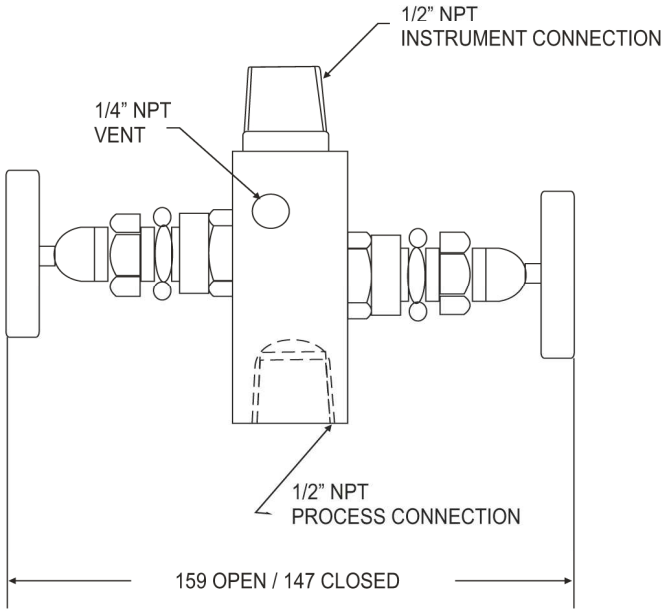

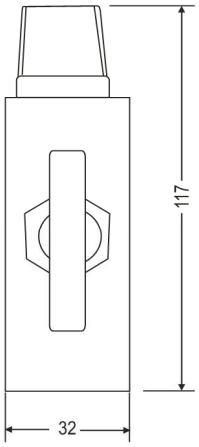

Standard connection

Product	Process side	Instrument side	Vent/Test
M2VTF	½"NPT Female	½"NPT Male	1/4" NPT Female

Web: www.pci-instruments.com | Email: sales@pci-instruments.com | Tel: +44 (0)1704 509090

M2VS

With threaded vertical port inlet and outlet. The vent/test connection is positioned on the front side. The drain bonnet is positioned on the right hand side and the isolating bonnet on the left hand side.

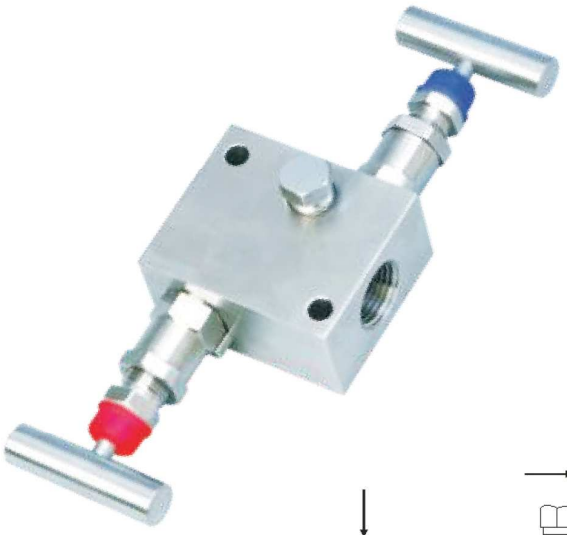

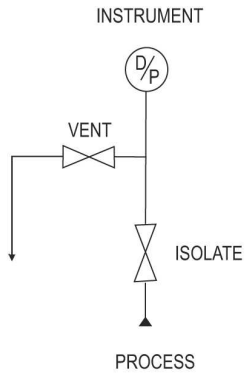

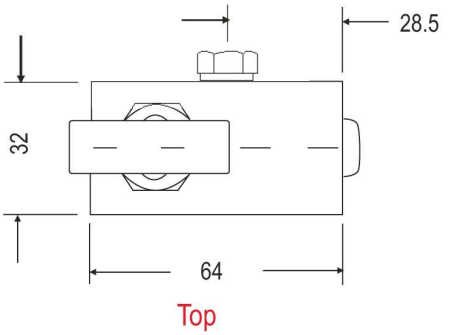

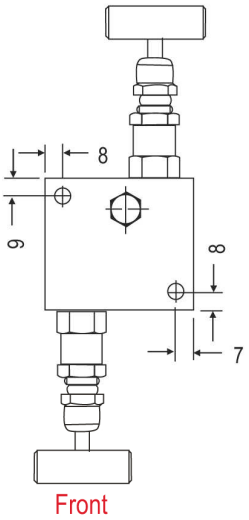

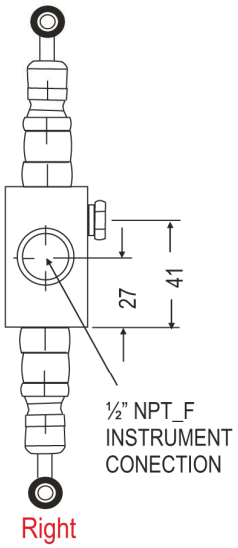

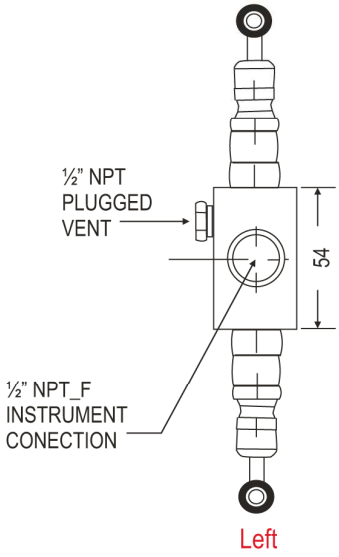

Standard connection

Product	Process side	Instrument side	Vent/Test
M2VS	1/2" NPT female	1/2" NPT female	1/4" NPT female

Remote or direct mounting by means of threaded connections.

M2VM With threaded horizontal port inlet, outlet and vent/test connection on the left hand side. The venting bonnet is positioned on the top and the isolating bonnet on the front.

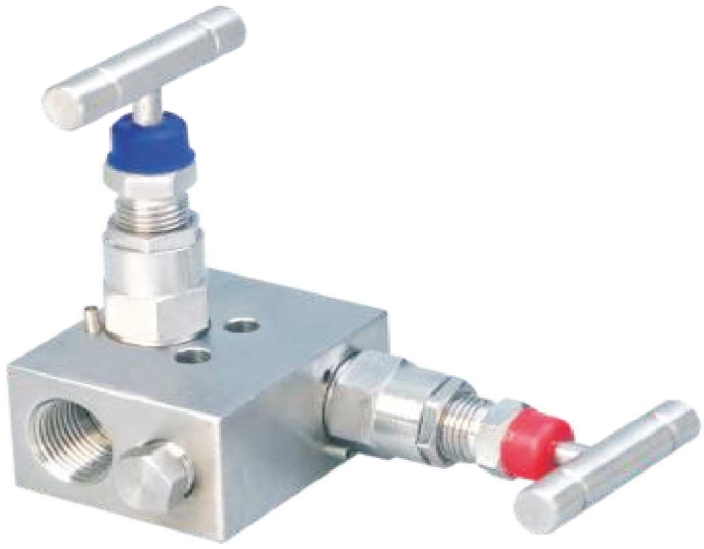

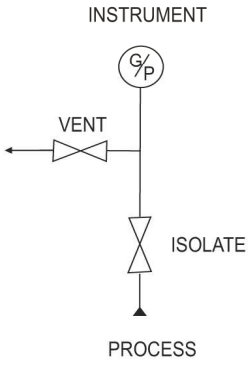

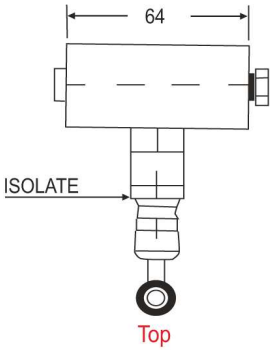

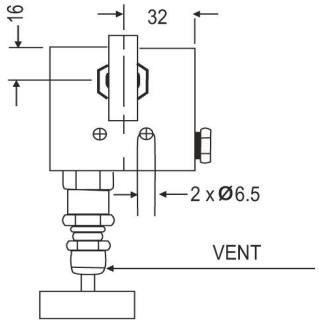

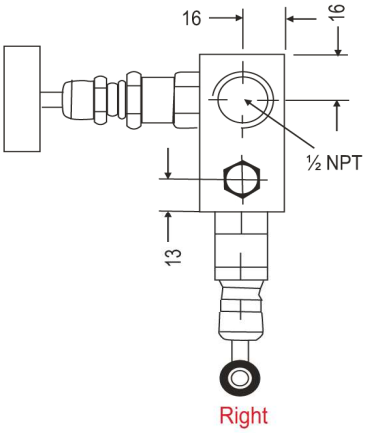

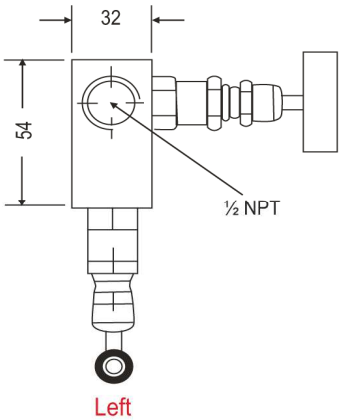

Standard connection

Product	Process side	Instrument side	Vent/Test
M2VM	1/2" NPT female	1/2" NPT female	1/4" NPT female

Web: www.pci-instruments.com | Email: sales@pci-instruments.com | Tel: +44 (0)1704 509090

Standard version specifications of model M2VH, M2VT, M2VTF, M2VA, M2VS, M2VM

Body	:	SS 316
Stem	:	SS 316
Valve assembly	:	SS 316
'T' bar handle	:	SS 304
Maximum working pressure	:	6000 psi
Maximum working temperature:		240°C
Packing	:	PTFE (Grafoil to be used for temperature above 240°C till 550°C)
Type of stem	:	Type CT; Stem with conical metal tip
Drain port	:	1/4" NPT [F]; provided with SS 316 plug
Bracket mounting holes	:	2 Nos. (Not available in models M2VT,M2VTF)
Chrome plating	:	Provided on stem tip and female threads of valve.

How to order : Valve Type - M2VH, M2VT, M2VTF, M2VA, M2VS, M2VM

Body Material	Stem Type	Stem Packing	Size = Inlet x Outlet	Connections	Threads
C = Carbon Steel	CT	P = PTFE	24 = 1/4" x 1/4"	MF = Male x Female	N = NPT to ANSI B1.20.1
S = SS 316	DS	G = Grafoil	33 = 3/8" x 3/8"	FF = Female x Female	P = BSPPto BS2779
SL = SS 316L			44 = 1/2" x 1/2"	SW = Socket weld	B = BSPT to BS21
M = Monel 400			66 = 3/4" x 1/2"	FM = Female x Male	
H = Hastellogy C			2F = 1/4"x Flange		
			3F = 3/8"x Flange		
			4F = 1/2"x Flange		

Options

- GH : Material test certificate
- GO : Hydrotest test certificate
- IE : Circular plastic.
- TF : Sour gas service to NACE standard MR-01-75.
- SG : Oxygen service. (manifolds are supplied cleaned and degreased)
- DS : Valves with stem having soft conical and delrin tip rolled into the needle for gas service.
- MB : Mounting bracket
- MBC : Mounting bolts [7/16" UNF] in carbon steel
- MBS : Mounting bolts [7/16" UNF] in SS

Example

To place an order simply refer to the codes in the table.

Valve Type	:	Body Material	+	Stem Type	+	Stem Packing	+	Size	+	Connections	+	Threads	+	Options
M2VA	:	S	+	CT	+	P	+	44	+	FF	+	N	=	FINAL ORDER

NOTE:

- The weld prepared types are available with female plain end - suitable for socket weld.
- Anti-tamper bonnet - special design on request with locking arrangement if desired.

M2VF

With threaded horizontal port inlet with a Flange outlet instrument connection. A vent/test port on base. The venting bonnet is positioned on the left hand side and the isolating bonnet angular on the top.

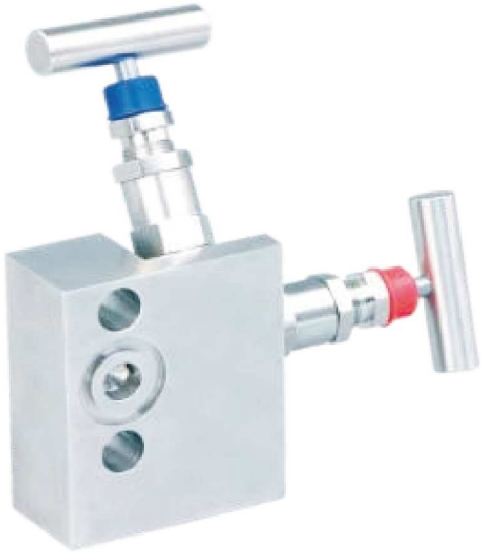

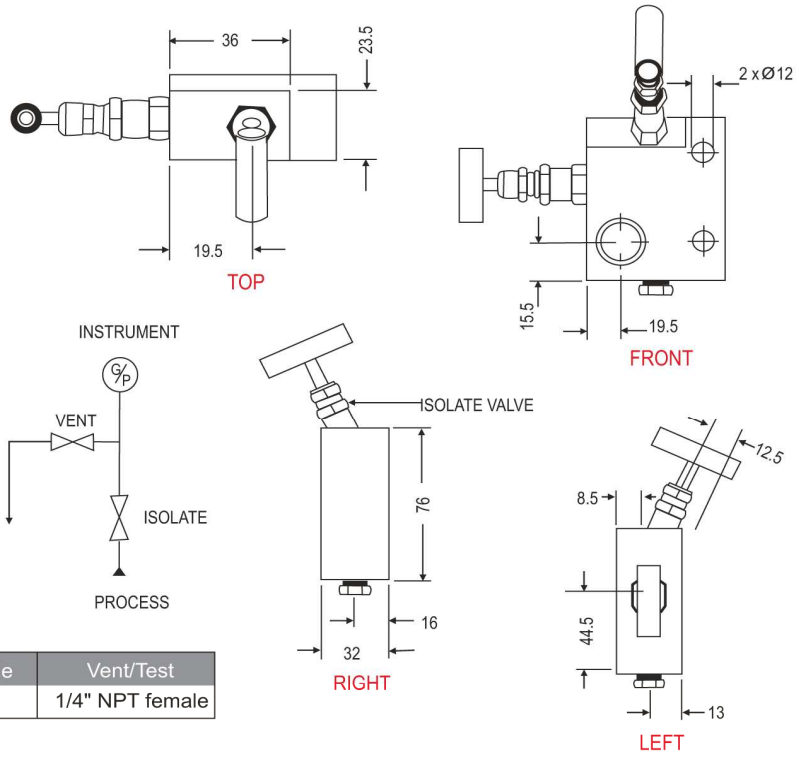

Standard connection

Product	Process Side	Instrument Side	Vent/Test
M2VF	1/2" NPT female	Flanged	1/4" NPT female

Standard version specifications of model M2VF

Body	:	SS 316
Stem	:	SS 316
Valve assembly	:	SS 316
'T' bar handle	:	SS 304
Maximum working pressure	:	6000 psi
Maximum working temperature:		240°C
Packing	:	PTFE (Grafoil to be used for temperature above 240°C till 550°C)
Type of stem	:	Type CT; Stem with conical metal tip
Drain port	:	¼" NPT [F]; provided with SS 316 plug
Bracket mounting holes	:	2 Nos.
Chrome plating	:	Provided on stem tip.

How to order : Valve Type - M2VF

Body Material	Stem Type	Stem Packing	Size = Inlet x Outlet	Connections	Threads
C = Carbon Steel	CT	P = PTFE	24 = 1/4" x 1/4"	MF = Male x Female	N = NPT to ANSI B1.20.1
S = SS 316	DS	G = Grafoil	33 = 3/8" x 3/8"	FF = Female x Female	P = BSPP to BS2779
SL = SS 316L			44 = 1/2" x 1/2"	SW = Socket weld	B = BSPT to BS21
M = Monel 400			66 = 3/4" x 1/2"	FM = Female x Male	
H = Hastellogy C			2F = 1/4"x Flange		
			3F = 3/8"x Flange		
			4F = 1/2"x Flange		

Options

- GH : Material test certificate
- GO : Hydrotest test certificate
- IE : Circular plastic.
- TF : Sour gas service to NACE standard MR-01-75.
- SG : Oxygen service. (manifolds are supplied cleaned and degreased)
- DS : Valves with stem having soft conical and delrin tip rolled into the needle for gas service.
- MB : Mounting bracket
- MBC : Mounting bolts [7/16" UNF] in carbon steel
- MBS : Mounting bolts [7/16" UNF] in SS

Example

To place an order simply refer to the codes in the table.

Valve Type	:	Body Material	+	Stem Type	+	Stem Packing	+	Size	+	Connections	+	Threads	+	Options
M2VF	:	S	+	CT	+	P	+	44	+	FF	+	N	=	FINAL ORDER

NOTE:

- The weld prepared types are available with female plain end - suitable for socket weld.
- Anti-tamper bonnet - special design on request with locking arrangement if desired.

M2VQ

With threaded horizontal port inlet on the front side and Flange outlet on the back side, test connection on the body. The isolating bonnet are positioned on the left and right hand side and the Equalizing Bonnet is positioned on the top.



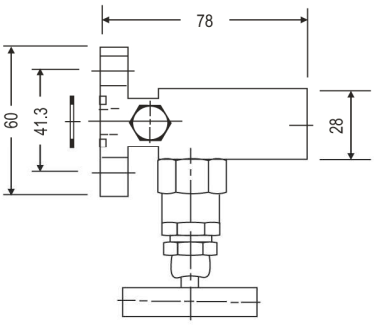

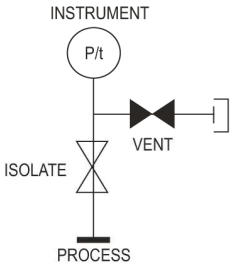

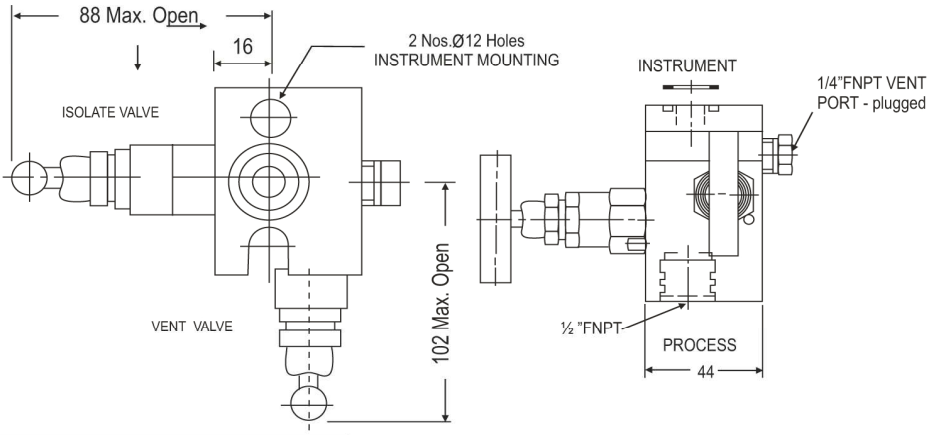

Standard connection

Product	Process side	Instrument side	Vent/Test
2MVQ	1/2" NPT female	Flange	1/4" NPT female

Standard version specifications of model M2VQ

Body	:	SS 316
Stem	:	SS 316
Valve assembly	:	SS 316
'T' bar handle	:	SS 304
Maximum working pressure	:	6000 psi
Maximum working temperature:		240°C
Packing	:	PTFE (Grafoil to be used for temperature above 240°C till 550°C)
Type of stem	:	Type CT; Stem with conical metal tip
Drain port	:	1/4" NPT [F]; provided with SS 316 plug
Chrome plating	:	Provided on stem tip

How to order : Valve Type - M2VQ

Body Material	Stem Type	Stem Packing	Size = Inlet x Outlet	Connections	Threads
C = Carbon Steel	CT	P = PTFE	2F = 1/4"x Flange	FF = Female x Female	N = NPT to ANSI B1.20.1
S = SS 316	DS	G = Grafoil	3F = 3/8"x Flange	SW = Socket weld	P = BSPPto BS2779
SL = SS 316L			4F = 1/2"x Flange (std)		B = BSPT to BS21
M = Monel 400					
H = Hastellogy C					

Options

- GH : Material test certificate
- GO : Hydrotest test certificate
- IE : Circular plastic.
- TF : Sour gas service to NACE standard MR-01-75.
- SG : Oxygen service. (manifolds are supplied cleaned and degreased)
- DS : Valves with stem having soft conical and delrin tip rolled into the needle for gas service.
- MB : Mounting bracket
- MBC : Mounting bolts [7/16" UNF] in carbon steel
- MBS : Mounting bolts [7/16" UNF] in SS

Example

To place an order simply refer to the codes in the table.

Valve Type	:	Body Material	+	Stem Type	+	Stem Packing	+	Size	+	Connections	+	Threads	+	Options
M2VQ	:	S	+	CT	+	P	+	4F	+	FF	+	N	=	FINAL ORDER

NOTE:

- The weld prepared types are available with female plain end - suitable for socket weld.
- Anti-tamper bonnet - special design on request with locking arrangement if desired.

M2VR

Special two valve manifold designed to accomodate threaded direct transmitters and pressure instruments with inlet at front and outlet on top, vent/test connection at front; venting bonnet at left side and isolating bonnet at right.

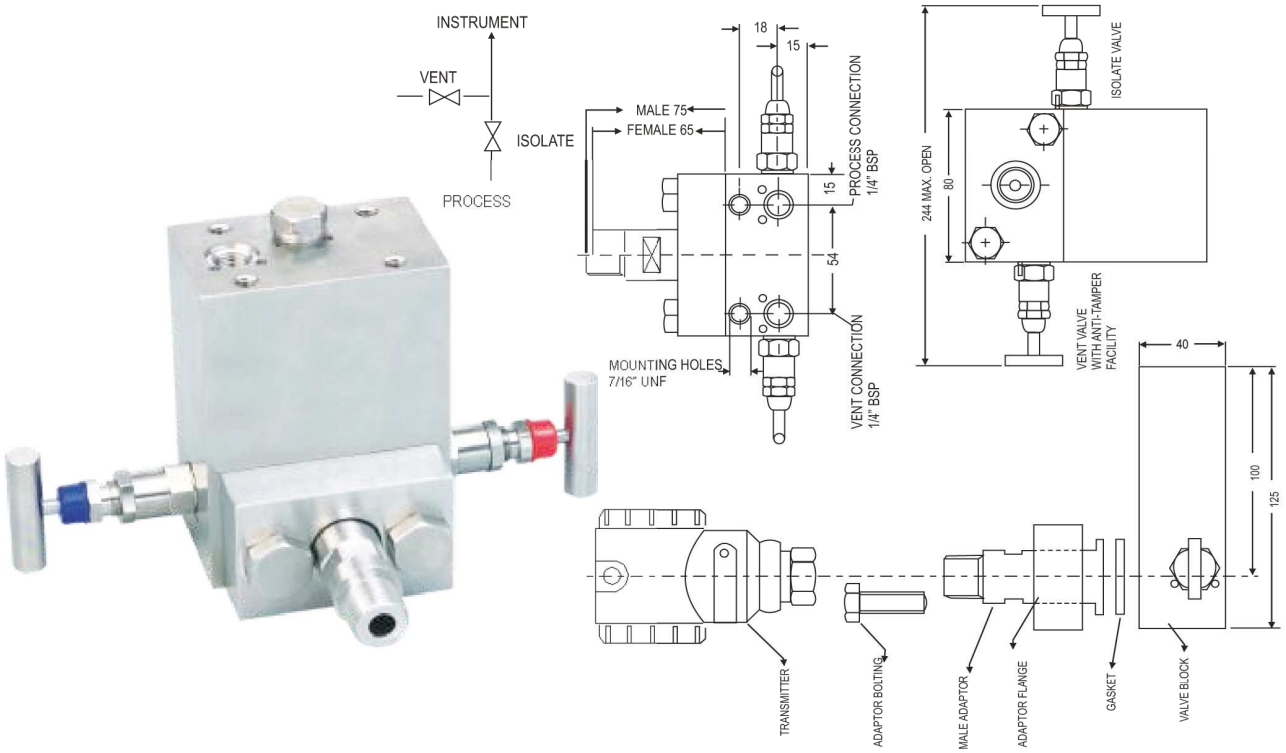

M2VRM

Special two valve manifold designed to accomodate threaded direct transmitters and pressure instruments with inlet at front and outlet on top, vent/test connection at front; venting bonnet at left side and isolating bonnet at right. (measurement differs from the model M2VR)

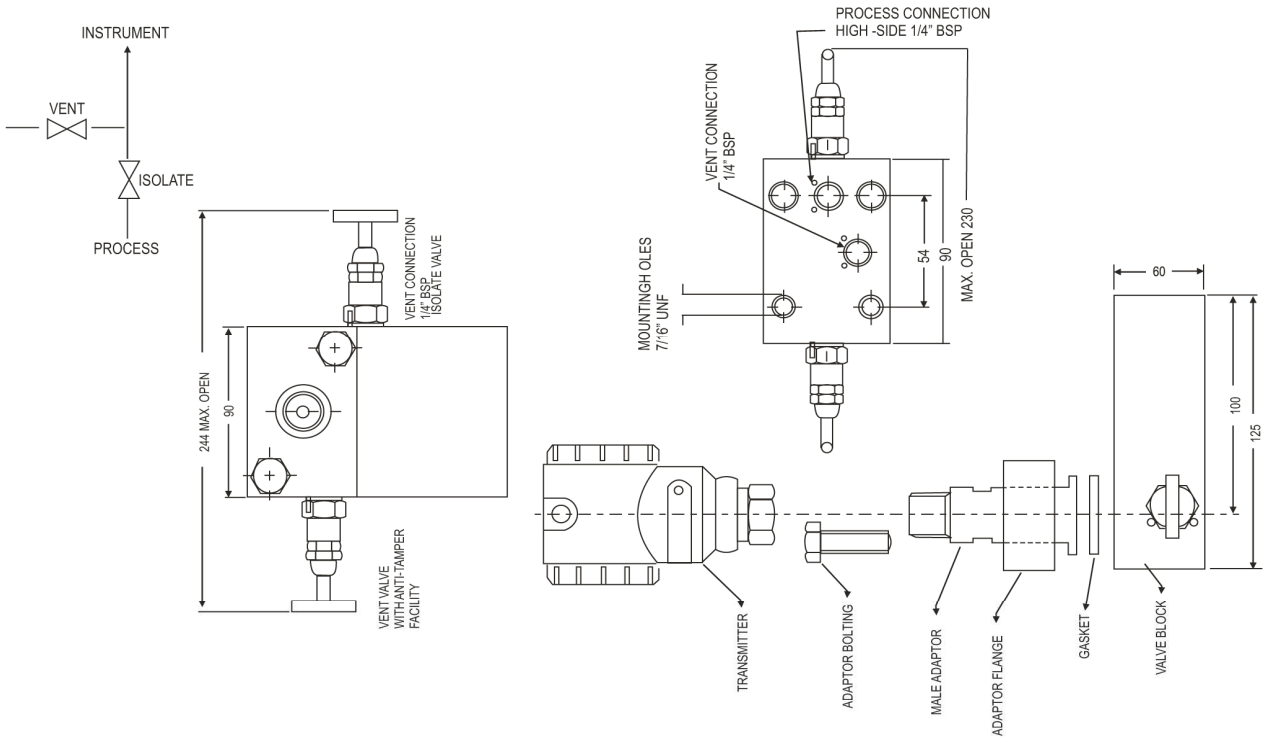

M2VB

Special two valve manifold with threaded port for inlet and outlet. The isolating bonnet is on the left side and the venting bonnet is on the right side.

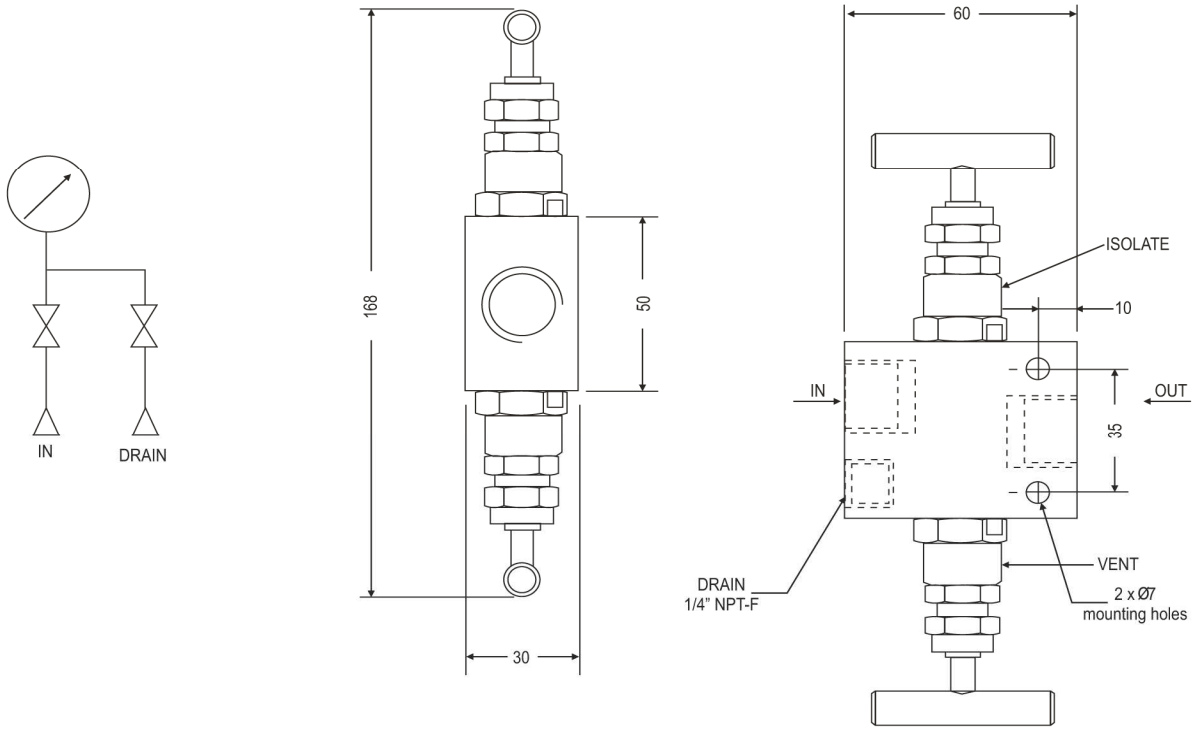

M2VC

Special two valve manifold with threaded inlet port on the bottom side process connecting on the back side. The isolating bonnet is on the left side and the venting bonnet is on the right side.

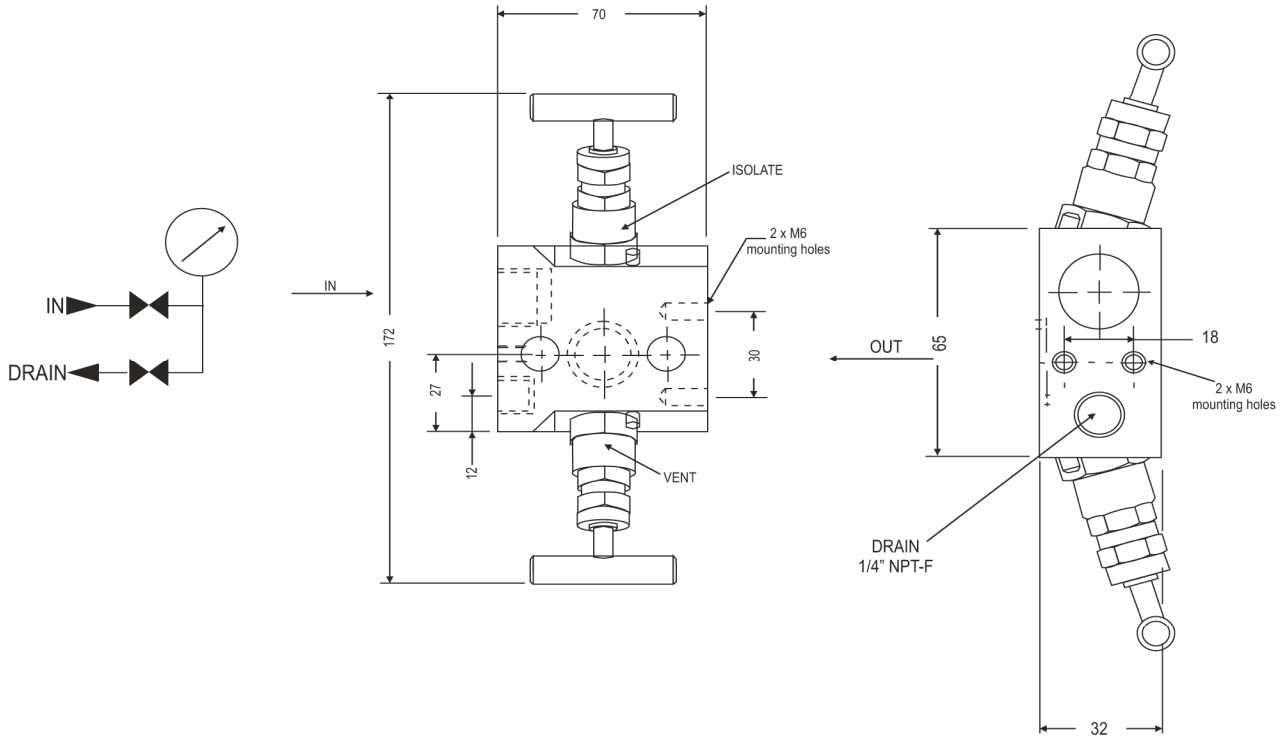

Web: www.pci-instruments.com | Email: sales@pci-instruments.com | Tel: +44 (0)1704 509090

M2VK

Special two valve compact manifold to accomodate any full DIN 19213 interface complaint pressure transmitter with inlet Flange to fit DIN 19213 and outlet also Flange to DIN 19213. Vent/test connection at front side, venting bonnet at right side and isolating bonnet on top.

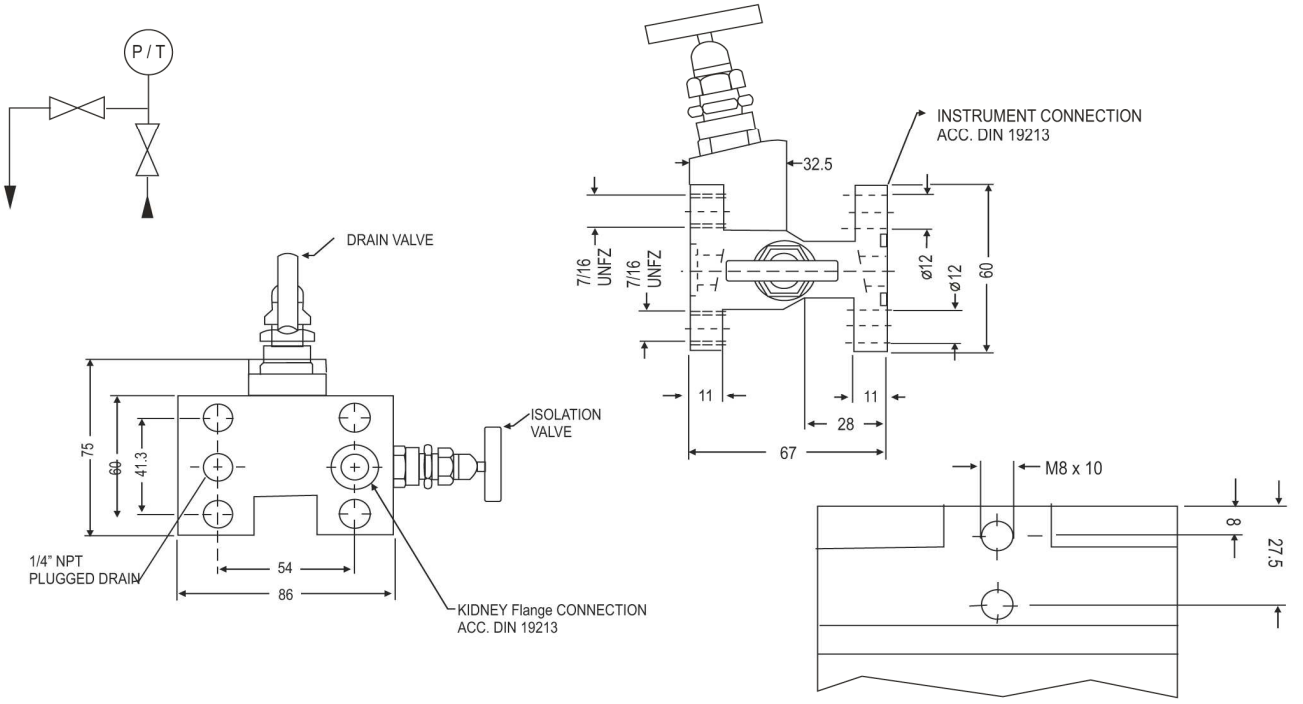

M2VFS

Special two valve manifold with threaded horizontal port NPT female inlet and horizontal BSP female rotatable instrument connection with vent/test connection at the back side. The venting bonnet is positioned angular at top side and the isolating bonnet at front side.

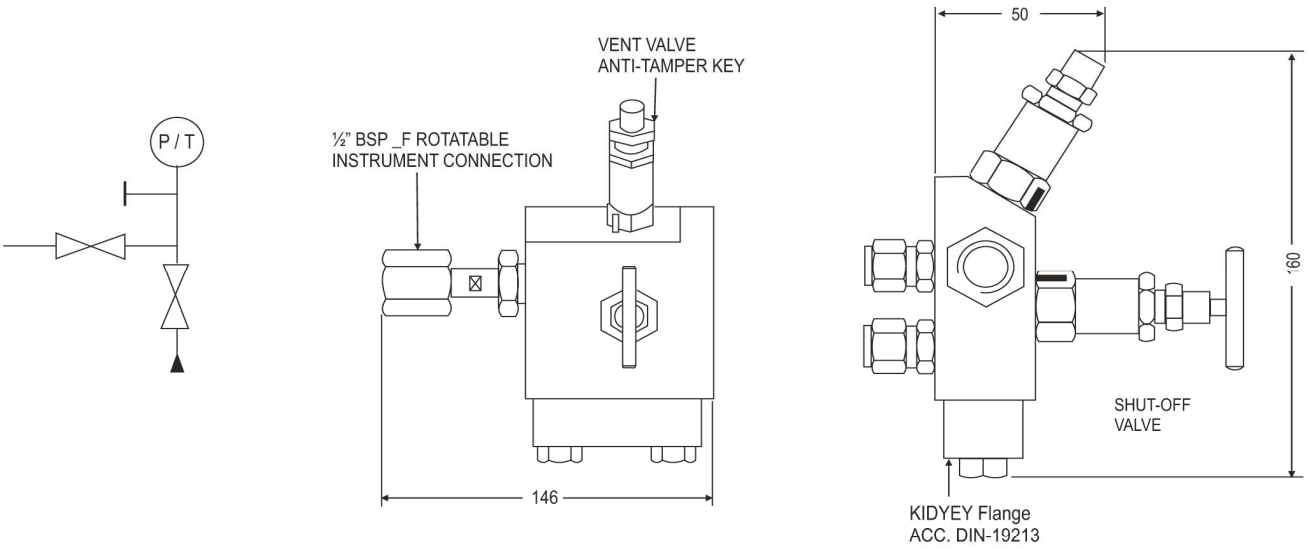

Web: www.pci-instruments.com | Email: sales@pci-instruments.com | Tel: +44 (0)1704 509090

M2V42

Special two valve manifold especially designed to suit FR 3051 transmitters with inlet NPT female at front, outlet Flange to DIN 19213 at back side-vent/test connection at back, isolating bonnet at left, venting bonnet angular at left hand side.

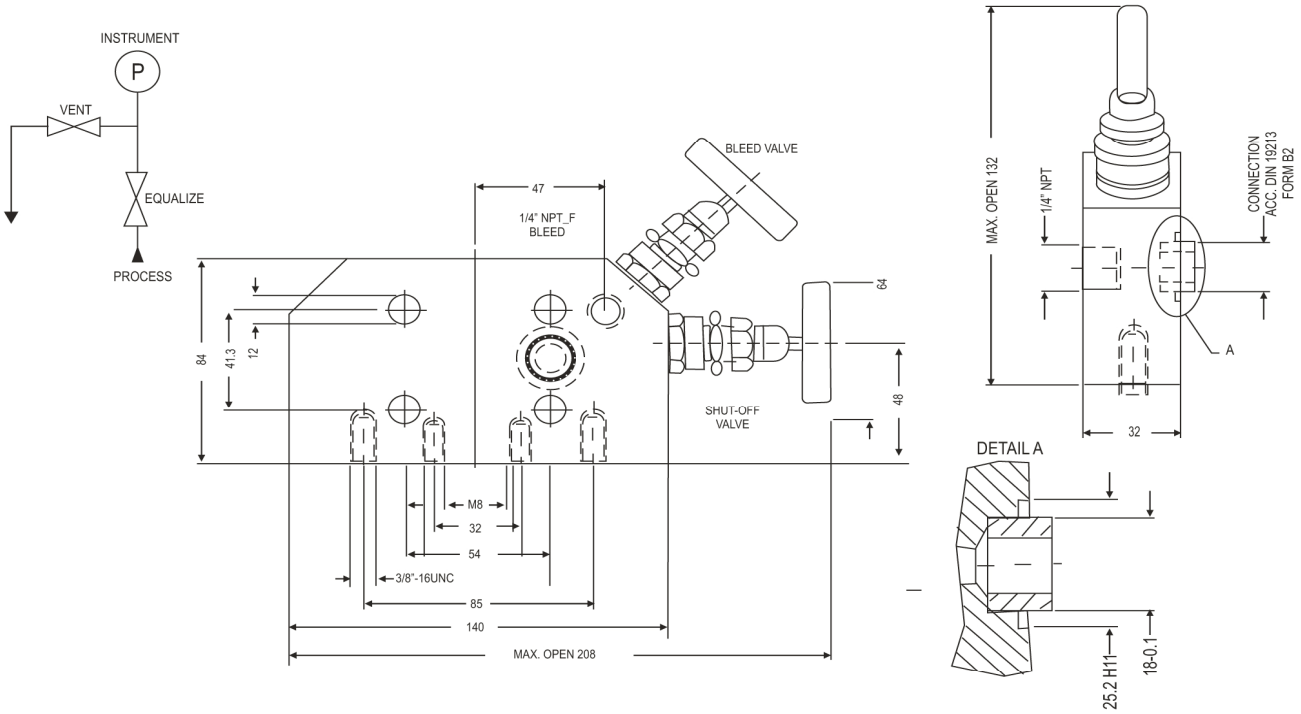

M2VZ

Special two valve manifold with vertical threaded port at inlet and outlet. Isolating and venting bonnet on top and drain port near inlet port.

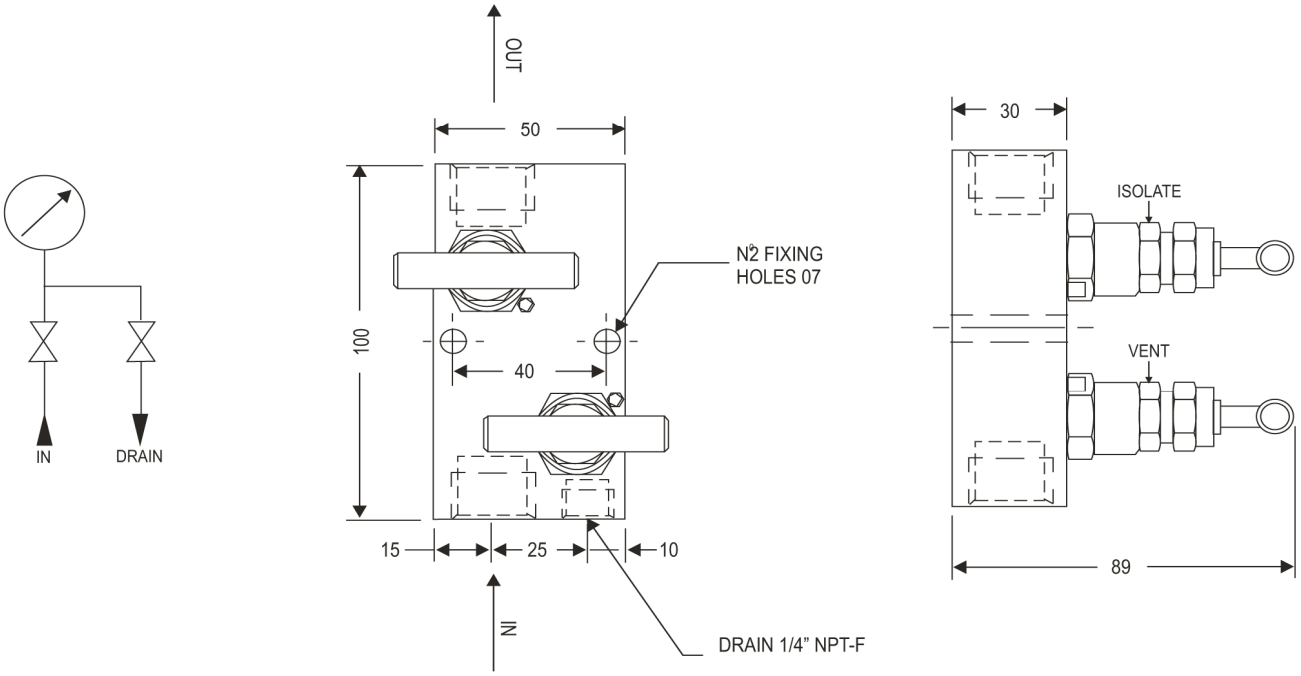

Web: www.pci-instruments.com | Email: sales@pci-instruments.com | Tel: +44 (0)1704 509090

M2VDR **Special two valve manifold with threaded vertical port inlet and outlet. The vent/test connection is** positioned on the right side, venting bonnet is positioned on top and isolating on left side.

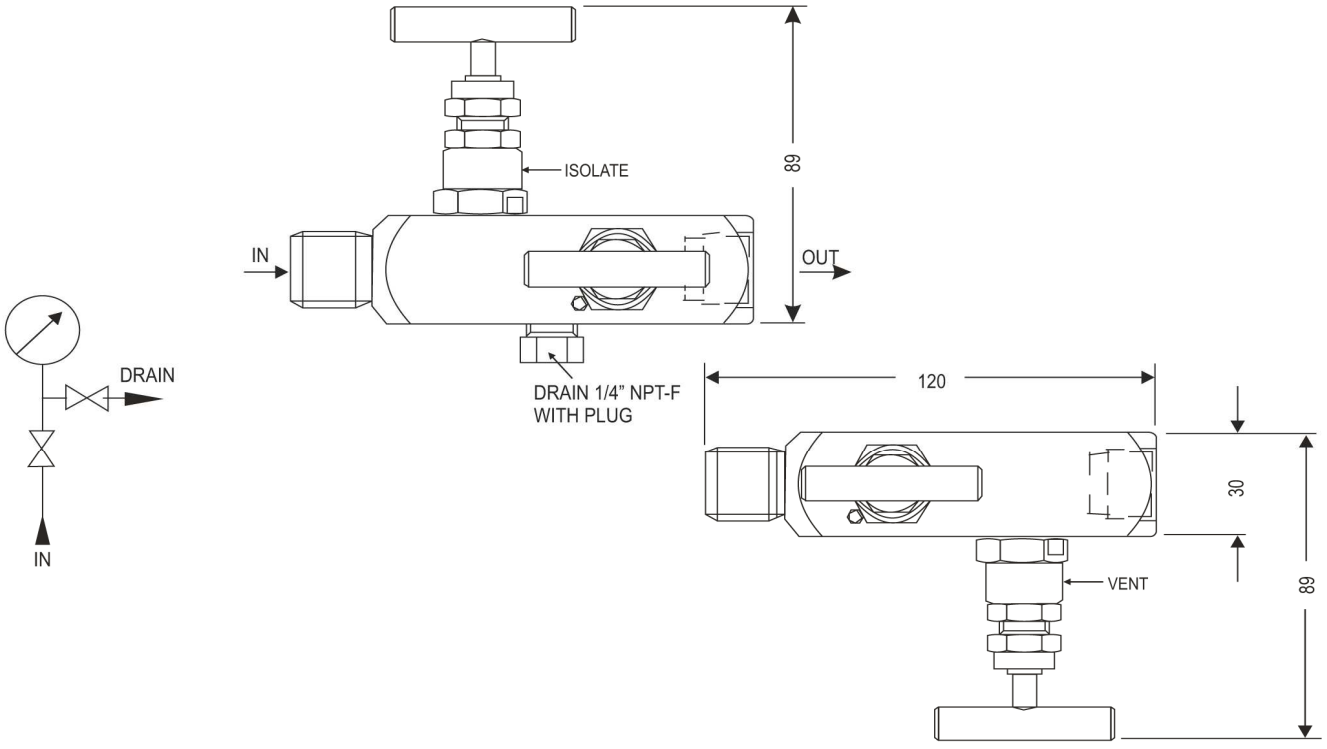

M2VDL Special two valve manifold with threaded vertical port inlet and outlet. The vent/test port is positioned on left side, venting bonnet is on top and isolating bonnet is on right side.

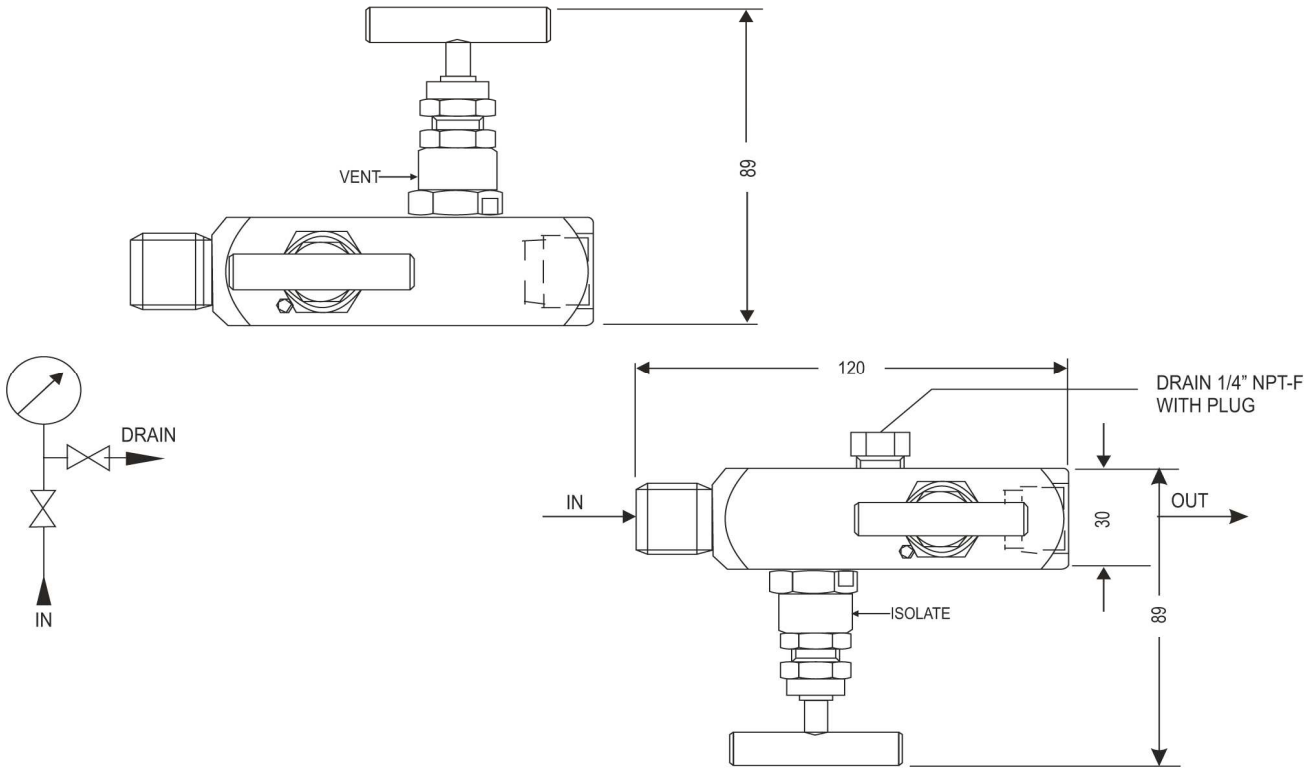

Web: www.pci-instruments.com | Email: sales@pci-instruments.com | Tel: +44 (0)1704 509090