NMPV

Type multiport gauge valve, being a completely roddable multi-outlet gauge valve, is most suitable for viscous applications and plugging services. Useable on gauge or instrument installations without additional penetration of the main piping for versatile multiple positioning purpose. The flow path of the valve is easily roddable on viscous fluid application cleaning. Available with a male inlet and three female outlet ports or female inlet and three female outlets. Main inlet either screwed or prepared for welding. Bleed valves and plugs to suit outlet ports supplied optional.

Pressure : 400 bar
Max temp. : 240°C
Multi outlet design up to 4" for pipe insulation extended valve inlet.
Stem : (Type BD) Replaceable soft seat which absorbs contaminants and operates in dirty service. Straight through design for high capacity bi-directional flow and rodding capabilities.
Stem packing area : Burnished mirror finish for smooth valve operation.



Size	Type	Length	Width	Ht open	Ht closed	Handle
1/4"	FxF	74	25	64.5	61	40
	MxF	84	25	64.5	61	40
3/8"	FxF	74	25	64.5	61	40
	MxF	84	25	64.5	61	40
1/2"	FxF	102	32	94	87	50
	MxF	115	32	94	87	50
3/4"	FxF	102	38	97	90	50
	MxF	115	38	97	90	50

All dimensions are in mm

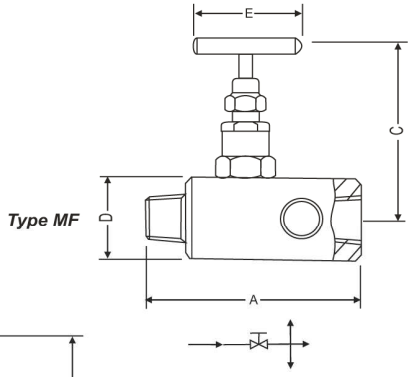

Type MF

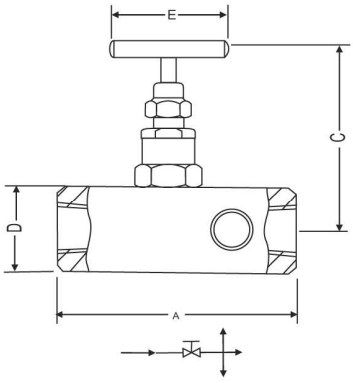

Type FF

Applications

- Multiple gauge or instrument mounting
- Instrument isolation
- Instrument installation with separate vents and calibrate connections
- Liquid and vapour gas service

Note : Other sizes available on request.

Isolate

Web: www.pci-instruments.com | Email: sales@pci-instruments.com | Tel: +44 (0)1704 509090

NMGT

Type multiport gauge valves are ideal for use on gauge or instrument installations without further penetrations of the main piping. A gauge valve with multiple outlets and inlets with in various sizes and connections. The standard three 1/2" NPT female screwed outlet ports offer a flexibility of alternative applications. Available with a male inlet and three female outlet ports or female inlet and three female outlets. Bleed valves and plugs to suit outlet ports supplied optional.

Pressure : 400 bar
Max temp. : 240°C
Multi outlet design extended valve inlet up to 4" max. for pipe insulation.
Stem : (Type CT) Conical tip press fitted hard chrome plated
Gland Packing : PTFE (Grafoil to be used for temperature above 240°C till 550°C)
Stem packing area : Burnished mirror finish for smooth valve operation.
Safety : Back seating for preventing stem blowout.



Size	Type	Length	Width	Ht open	Ht closed	Handle
1/4"	FxF	74	25	63	60.5	40
	MxF	84	25	63	60.5	40
3/8"	FxF	74	25	63	60.5	40
	MxF	84	25	63	60.5	40
1/2"	FxF	102	32	83.6	79.6	50
	MxF	115	32	83.6	79.6	50
3/4"	FxF	102	38	86.8	82.6	50
	MxF	115	38	86.6	82.6	50

All dimensions are in mm

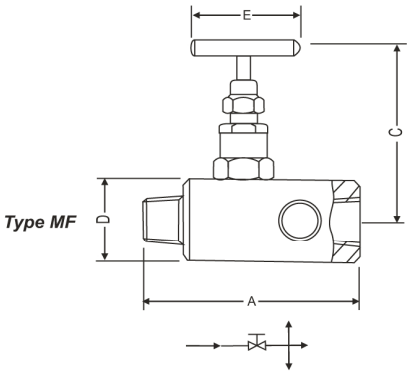

Type MF

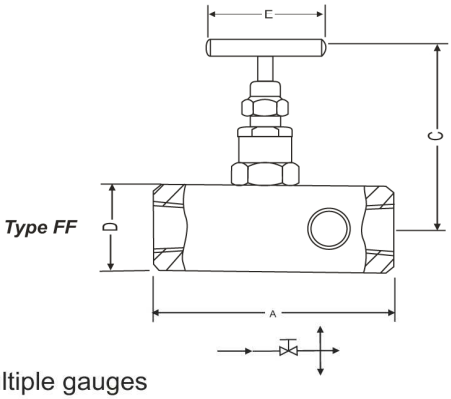

Type FF

Applications

- Mounting of instruments or multiple gauges
- Instrument isolation
- Instrument installation with separate vents and calibrate connections
- Liquid and vapour gas service

Optional : Also available High pressure valves with stem HPa for 10,000 psi pressure model no. is NMGT10
Also available High pressure valves with stem V2 for 20,000 psi pressure model no. is NMGT20

Note : Other sizes available on request.



Isolate

How to order : NMPV, NMGT, NMGT10, NMGT20

Multi Port Valve

Body Material	Stem Packing	Size = P x P1	Connections	Threads
C = Carbon Steel	P = PTFE	24 = 1/4" x 1/4"	FF = Female x Female	N = NPT to ANSI B1.20.1.
S = SS 316	G = Grafoil	44 = 1/2" x 1/2"	MF = Male x Female	P = BSPP to BS2779
SL = SS 316L		46 = 1/2" x 3/4"	SW = Socket Weld	B = BSPT to BS21
M = Monel 400		64 = 3/4" x 1/2"	FL = Female x extended long body end	
H = Hastelloy C		66 = 3/4" x 3/4"		
B = Brass				

Options -

IE : Handle circular plastic.
TF : Sour gas service to NACE standard MR-01-75.
SG: For Oxygen service, valves are supplied cleaned and degreased and suitably packed.
GH: Material test certificate
GO: Hydrotest test certificate

Example -

To place an order simply refer to the codes in the table.

Valve Type : Body Material + Stem Packing + Size + Connections + Threads + Option

NMGT : S + P + 44 + MF + N = Final Order

Note -

The weld prepared types are available with a male-or-female plain end - suitable for socket weld, or male butt weld end. Always specify pipe schedule and further requirements when ordering valves for welded or Flange connections. Panel mounting option for installation in racks and panels.

Standard Valve Materials

Valve	Body	Bonnet	Stem	Tip
Carbon Steel	CS A105	SS304	SS316	SS316
Stainless Steel	SS316	SS316	SS316	SS316
Monel	Alloy 4000	Alloy 4000	Alloy 4000	Alloy 5000
Sour Gas	SS316	SS316	Alloy 4000	Alloy 5000