Homogeniser Gauges
TETROPRESS 300 WITH HOMOGENISER SEAL



Introduction

Our homogeniser pressure gauges are compatible with most leading homogeniser pump manufacturers. Each gauge features an integrated dampening mechanism designed to reduce the effects of high-pressure surges, thereby improving long-term durability. The gauges are available for both direct installation and remote mounting via capillary tubing, offering flexible configuration options for homogenisation systems.

Specifications

- Diameters: 100-160mm
- Case and ring: st. st. 304, bayonet type ring
- Protection degree: IP65
- Window: acrylic
- Movement: st. st., reinforced
- Dial: aluminium with black numerals on white background
- Pointer: aluminium, black painted, adjustable
- Blow out: neoprene, upper
- Sensing element: helical wound
- Element material: AISI 316L
- Socket material: AISI 316L
- Mounting:
  type A - bottom connection, direct mounting
  type C - bottom connection, surface mounting
- Ranges: See table
- Accuracy: class 1, acc. to EN837
- Ambient temperature limit: -40/+60°C

Options

- Silicone oil filling for ambient temperature -40/+60 °C
- Acrylic window with max value pointer resettable from the front
- Connection to instrument using a capillary (mounting type C)

Available certification

- 2.1 certificate of conformity
- 3.1 material certificate
- Test certificate for indication accuracy

How to order

Please specify: model, mounting, case diameter, range, connection, options, certificates
Example: TP300, A, 100mm, 0/400 bar, C1 with mounting block

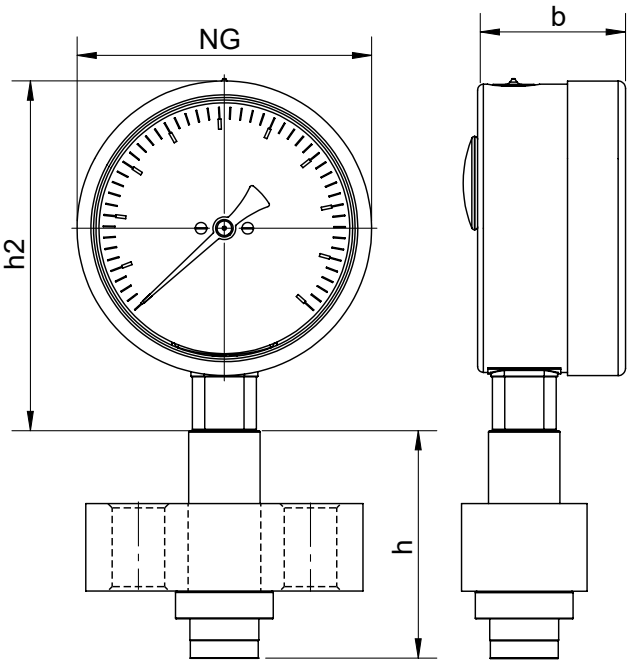

NG	b	h2	h
100	49	117	See Seal table
160	50	175	See Seal table

Dimensions (mm)

Ranges								
bar	0/100	0/160	0/280	0/315	0/400	0/600	0/1000	0/1600
psi	0/1000	0/1500	0/2000	0/4000	0/6000	0/10000	0/15000	0/20000

Web: www.pci-instruments.com | Email: sales@pci-instruments.com | Tel: +44 (0)1704 509090

Homogeniser Gauges
TETROPRESS 300 WITH HOMOGENISER SEAL

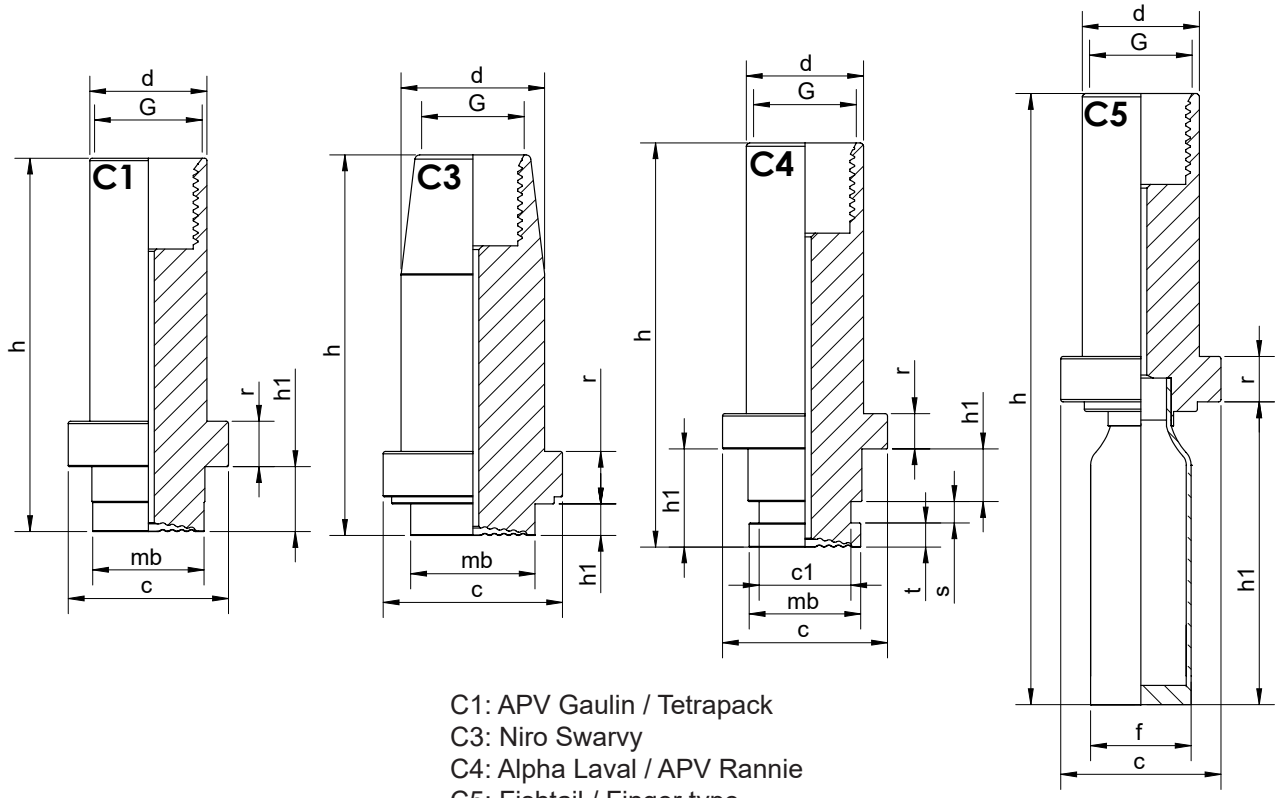

C1: APV Gaulin / Tetrapack
C3: Niro Swarvy
C4: Alpha Laval / APV Rannie
C5: Fishtail / Finger type

Type	h	d	c	h1	r	G	Weight
C1 - STD Homogeniser	78	24.5	33.5	13.5	9.5	½" BSPF	0.27
C3 - Niro	79.5	30	37.5	6.5	11	½" BSPF	0.40
C4 - Rannie Pipe Seal	85	24.5	34.5	5.1	7.5	½" BSPF	0.27
C5 - Fishtail	128	24.5	33.5	63	9.5	½" BSPF	0.3
			Dimensions in mm				Kg

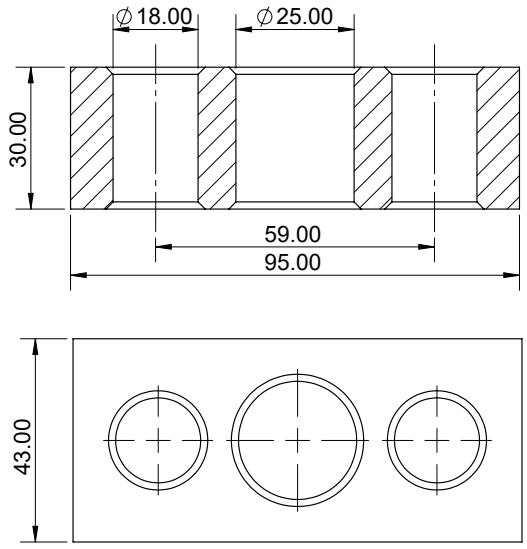

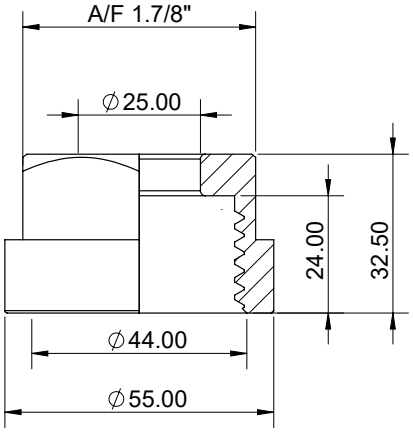

Available with Mounting Block or 1.1/4" BSP Nut

Web: www.pci-instruments.com | Email: sales@pci-instruments.com | Tel: +44 (0)1704 509090