

Introduction

PCI offers homogeniser diaphragm seals to suit most brands of homogeniser pumps. A dampening device is incorporated into the seal to help protect the instrument from premature failure due to high pressure spikes. These seals can be fitted direct or via a capillary for remote mounting.

Specifications

Ranges: from 0/160bar up to 0/1600bar (or equivalent)
Process connection: AISI316L Diaphragm: AISI316L

Options

• Mounting block

Available certification

• 3.1 material certificate

How to order

Please specify: model, options certificates
Example: C2 Niro,

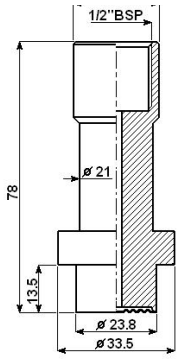

C1 - Homogeniser Seal

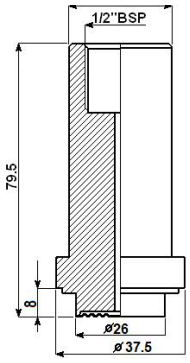

C3 - Niro Seal

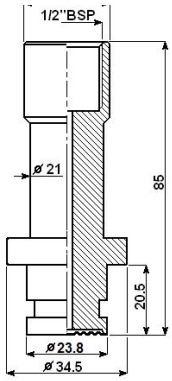

C4 - Rannie Pipe Seal

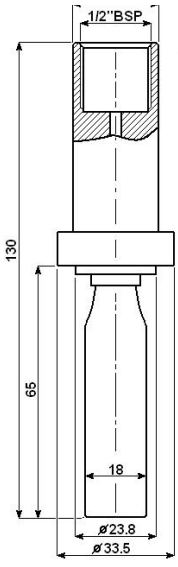

C5 - Fishtail Seal

DN	Hex
3/4" BSPF	32
1" BSPF	41
1.1/4" BSPF	50

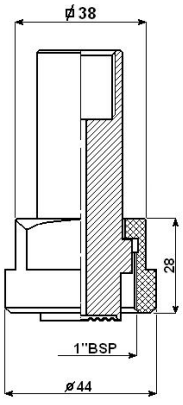

C6 - Homogeniser Seal with female connection

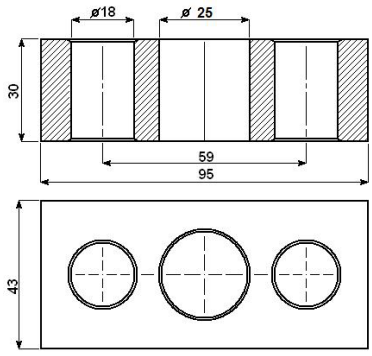

Mounting Block

C1 = APV Gaulin / Tetrapack
C3 = Niro Swarvy
C4 = Alpha Laval / APV Rannie

Web: www.pci-instruments.com | Email: sales@pci-instruments.com | Tel: +44 (0)1704 509090