Low Vacuum Absolute Pressure Gauge
ABPRESS 100



Introduction

The AB100 is a cost effective general purpose vacuum gauge designed to meet a wide range of low vacuum measurement applications.

- Barometrically compensated
- Smooth jewelled movement
- Large 85mm dial face
- Can be mounted in panel or directly to plumbing
- Can be over pressured to 2 bar absolute without damage

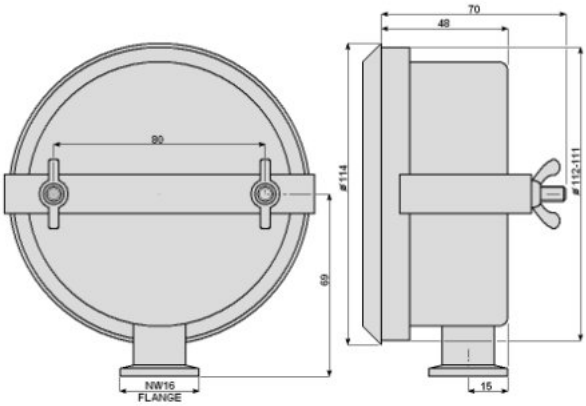

Specifications Model Type

Mounting:
Type A bottom connection, clamp fixing,
Type B lower back connection, clamp fixing,
Chemically resistance: No
Accuracy: +/-2%
Internal volume: 180cc
Weight: 800g
Movement: All bearing faces are jewelled

Ranges (dual)

0-25 mbar/0-20 torr
0-50 mbar/0-40 torr
0-125 mbar/0-100 torr
0-1000mbar/0-760 torr

Ranges (single)

0-25 mbar
0-50 mbar
0-120 mbar
0-150 mbar
0-1000 mbar
0-20 torr
0-40 torr
0-100 torr
0-760 torr

Fittings

KF16 Stainless steel gauge adaptor
1/8” NPT Brass gauge adaptor
3/8” BSP Brass demountable 6mm liner
3/8” BSP Brass demountable 8mm liner

Optional

KF16 Stainless steel centering ring
KF16 Aluminium swing clamp

Available certification

- 2.1 certificate of conformity
- Test certificate for indication accuracy

How to order

Please specify: model, mounting, range, connection, options, certificates
Example: AB100, A, 0/25 mbar, KF16 adaptor

Web: www.pci-instruments.com | Email: sales@pci-instruments.com | Tel: +44 (0)1704 509090