NNV4

Type needle valves with hard seat are designed for use on applications requiring complete isolation or throttling of the media.The conical metal tip (Stem Type CT) press fitted ensures perfect alignment for positive bubble tight shut-off. Available with end connections in sizes from 1/8" to 1" and a wide choice in connections of female screwed, male screwed, male to female screwed or socket weld.

Pressure	:	400 bar
Max temp.	:	240°C
Material	:	Stainless Steel
Stem	:	(CT) chrome plated Conical tip press fitted hard .
Gland Packing	:	PTFE(Grafoil to be used for temperature above 240ºC to 550ºC)
Stem packing area	:	Burnished mirror finish for Smooth valve operation.
Safety	:	Back seating for preventing stem blowout.



Size	Type	Length	Width	Ht open	Ht closed	Handle
1/8"	FxF	50	22	55	52	40
	MxF	55	22	55	52	40
	MxM	60	22	55	52	40
1/4"	FxF	55	25	63	60.5	40
	MxF	65	25	63	60.5	40
	MxM	60	25	63	60.5	40
3/8"	FxF	55	25	63	60.5	40
	MxF	65	25	63	60.5	40
	MxM	65	25	63	60.5	40
1/2"	FxF	65	32	83.6	79.6	50
	MxF	75	32	83.6	79.6	50
	MxM	70	32	83.6	79.6	50
3/4"	FxF	70	38	88.6	82.6	50
	MxF	75	38	88.6	82.6	50
	MxM	80	32	83.6	79.6	50
1"	FxF	90	45	101	96	50
	MxF	105	45	101	96	50
	MxM	105	45	101	96	50

All dimensions are in mm

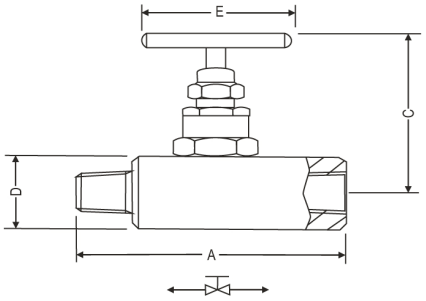

Type MF

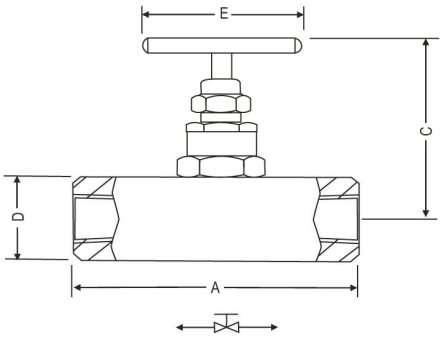

Type FF

Applications

- High pressure line shut off.
- Instrument isolation.
- Gauge isolation.
- Drain valve.
- **Liquid and vapor service**

Optional : Also available High pressure valves with stem HPa for 10,000 psi pressure model no. is NNV10
Also available High pressure valves with stem V2 for 20,000 psi pressure model no. is NNV20

Note : Other sizes available on request.

Isolate

Web: www.pci-instruments.com | Email: sales@pci-instruments.com | Tel: +44 (0)1704 509090

NGSV

Type needle valves with soft seat types are designed for use on applications requiring complete isolation or throttling of the media and for high pressure instrument lines. Ideal for use on gas services and some liquid applications. Specially designed Delrin needle tip (stem type DS) rolled in to the stem assembly in perfect location for positive bubble tight shut-off. Available with end connections in sizes from 1/4" to 1" and a wide choice of female screwed, male to female screwed or socket weld.

Pressure	:	400 bar
Max temp. in C	:	100°C
Material	:	Stainless steel
Stem	:	(DS)Delrin Soft Needle Tip rolled into the needle
Gland Packing	:	PTFE
Stem packing area	:	Burnished mirror finish for smooth valve operation.
Safety	:	Back seating for preventing stem blowout.



Size	Type	Length	Width	Ht open	Ht closed	Handle
1/8"	FxF	50	25	63.5	61	40
	MxF	55	25	63.5	61	40
	MxM	60	25	63.5	61	40
1/4"	FxF	55	25	63.5	61	40
	MxF	65	25	63.5	61	40
	MxM	60	25	63.5	61	40
3/8"	FxF	55	25	63.5	61	40
	MxF	65	25	63.5	61	40
	MxM	65	25	63.5	61	40
1/2"	FxF	65	32	93.5	89.5	50
	MxF	75	32	93.5	89.5	50
	MxM	70	32	93.5	89.5	50
3/4"	FxF	70	38	96.5	92.5	50
	MxF	75	38	96.5	92.5	50
	MxM	80	32	93.5	89.5	50
1"	FxF	90	45	-	-	50
	MxF	105	45	-	-	50
	MxM	105	45	-	-	50

All dimensions are in mm

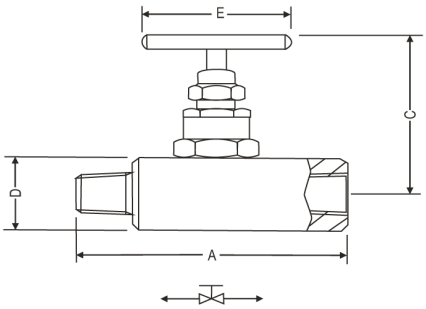

Type MF

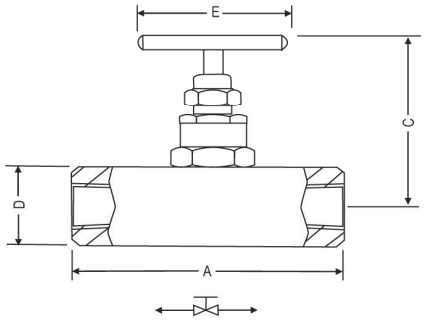

Type FF

Applications

- Instrument line shut off.
- Instrument isolation.
- Gauge isolation.
- Drain valve.
- Specially designed for **gas service and liquid applications**.

Note : Other sizes available on request.

Isolate

Web: www.pci-instruments.com | Email: sales@pci-instruments.com | Tel: +44 (0)1704 509090

NRPV

Type needle valves with rising plug design meant for use **in applications on fluids containing solid particles designed to give high capacity bi-directional flow with reliable bubble shut-off**. The flow path of the valve is easily roddable on viscous fluid application cleaning. Available with end connections in sizes from ¼" to 1" and a wide choice of female screwed, male to female screwed or socket weld.



Pressure : 400 bar
Max temp. : 240^{0}C
Seat : Delrin
Stem : Rising Plug(Type BD)
Replaceable soft seat which absorbs contaminants and operates in dirty service, with easy maintenance. Straight through design for high capacity bi-directional flow and rodding capabilities.
Stem packing area : Burnished mirror finish for smooth valve operation.
Safety : Back seating for preventing stem blowout.

Size	Type	Length	Width	Ht open	Ht closed	Handle
1/8"	FxF	50	25	64.5	61	40
	MxF	55	25	64.5	61	40
	MxM	60	25	64.5	61	40
1/4"	FxF	55	25	64.5	61	40
	MxF	65	25	64.5	61	40
	MxM	60	25	64.5	61	40
3/8"	FxF	55	25	64.5	61	40
	MxF	65	25	64.5	61	40
	MxM	65	25	64.5	61	40
1/2"	FxF	65	32	94	87	50
	MxF	75	32	94	87	50
	MxM	80	32	94	87	50
3/4"	FxF	70	38	97	90	50
	MxF	75	38	97	90	50
	MxM	80	32	94	87	50
1"	FxF	90	45	-	-	50
	MxF	105	45	-	-	50
	MxM	105	45	-	-	50

All dimensions are in mm

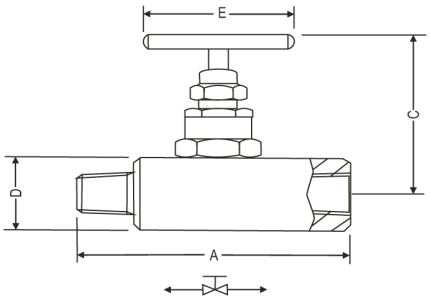

Type MF

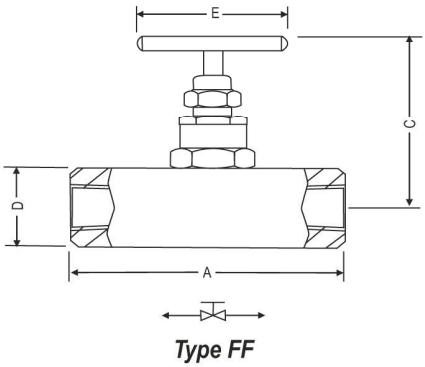

Type FF

Applications

- Instrument line shut off.
- Instrument isolation.
- Gauge isolation.
- Drain / vent valve.
- **Viscous and plugging service.**

Note : Other sizes available on request.

Isolate

Web: www.pci-instruments.com | Email: sales@pci-instruments.com | Tel: +44 (0)1704 509090

How to order : NNV4, NNV10, NNV20, NRPV, NGSV,

Needle Valve

Body Material	Stem Packing	Size = P x P1	Connections	Threads
C = Carbon Steel	P = PTFE	24 = 1/4" x 1/4"	FF = Female x Female	N = NPT to ANSI B1.20.1.
S = SS 316	G = Grafoil	33 = 3/8" x 3/8"	MF = Male x Female	P = BSPP to Bs2779
SL = SS 316L		44 = 1/2" x 1/2"	MM = Male x Male	B = BSPT to BS21
M = Monel 400		66 = 3/4" x 3/4"	SW = Socket Weld	
H = Hastelloy C		88 = 1" x 1"		
B = Brass				

Options -

IE : Handle circular plastic.
TF: Sour gas service to NACE standard MR-01-75.
SG: For Oxygen service, valves are supplied cleaned and degreased and suitably packed.
GH: Material test certificate
GO: Hydrotest test certificate

Example -

To place an order simply refer to the codes in the table.

Valve Type: Body Material + Stem Packing + Size + Connections + Threads + Options

NNV4 : S + P + 44 + FF + N = Final Order

Note -

The weld prepared types are available with a male-or-female plain end - suitable for socket weld, or male butt weld end. Always specify pipe schedule and further requirements when ordering valves for welded or Flange connections. Panel mounting option for installation in racks and panels.

Standard Valve Materials

Valve	Body	Bonnet	Stem	Tip
Carbon Steel	CS A105	SS304	SS316	SS316
Stainless Steel	SS316	SS316	SS316	SS316
Monel	Alloy 400	Alloy 400	Alloy 400	Alloy K500
Sour Gas	SS316	SS316	Alloy 400	Alloy K500