Hygienic Diaphragm Seals
HYGEIA


Tri - Clamp


Varivent®


DIN


SMS


RJT


IDF

Introduction

The HYGEIA series of hygienic diaphragm seals, produced by PCI in the United Kingdom, are engineered to the highest manufacturing standards. These seals are specifically designed for applications within the food processing and pharmaceutical industries, where stringent hygiene requirements are paramount.

The primary function of a diaphragm seal is to isolate the pressure-sensing instrument from the process medium, thereby protecting the instrument from potential contamination or damage. Typically, diaphragm seals are mounted directly onto the measuring device; however, remote installation via a capillary tube is also possible.

The cavity behind the diaphragm and within the pressure instrument is filled with a specialised fluid that serves as a hydraulic transmission medium. When process pressure is exerted on the diaphragm, the resulting displacement of the fill fluid transmits the pressure to the instrument's sensing element. This configuration enables accurate pressure measurement while preventing direct exposure of the sensing element to the process medium.

Special features

- Flush welded diaphragm (free of dead space)
- Low fill fluid capacity helps to prevent measurement errors caused by high of fluctuating temperatures
- Diaphragm protected against rupture with backup convolution
- Helium leak tested to ensure integrity of diaphragm
- Suitable for CIP and SIP processes

Diaphragm seal specifications

Body Material: AISI 316L
Nut Material: AISI 304
Wetted Part and Diaphragm Material: AISI 316L
Surface roughness of wetted parts: Ra ≤ 0.76 µm (except weld seam)

Options for diaphragm seal

- Diaphragm with surface roughness Ra <0.38 µm for high cleanability in CIP process
- Other instrument connections on request
- Other construction materials on request

Available certification

- 2.1 Certificate of conformity
- 3.1 Material certificate
- Others on request

How to order diaphragm seal

Please specify: model, diaphragm seal type, size, options, certificates
Example: HYGEIA, Tri-clamp, 2”, 3.1 material certificate

Web: www.pci-instruments.com | Email: sales@pci-instruments.com | Tel: +44 (0)1704 509090

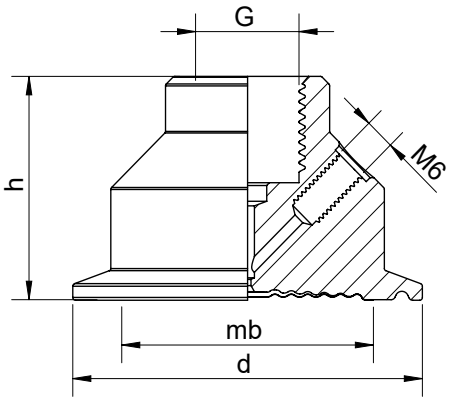

TRI-CLAMP – DIN 32676 Series C for pipes per ASME-BPE					
DN	d	mb	h	G	kg
3/4"	25	17	40	¼" BSP	0.2

TRI-CLAMP
DIN 32676 Series C for pipes per ASME-BPE
DIN 32676 Series A for pipes per EN 10357
ISO 2852 for pipes per ISO 2037
Dimensions (mm)

Compatible Standard Sizes

DIN C	DIN A	ISO	d	mb	h	G	kg
1"	DN25	DN25	50.4	23.2	39	½" BSP	0.3
1 ½"	DN40	DN38	50.4	34	39	½" BSP	0.3
2"	DN50	DN51	63.9	46.4	40	½" BSP	0.5
2 ½"	-	DN63.5	77.5	58	40	½" BSP	0.6
3"	DN65	DN76.1	90.9	69	38	½" BSP	0.9
4"	DN100	DN101.6	118.9	89	27	½" BSP	1.5

Max pressure dependant on size and clamp type used

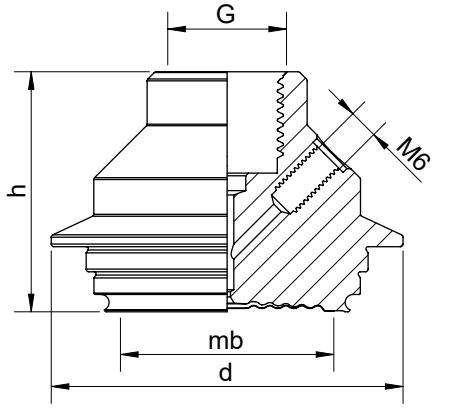

VARIVENT® COMPATIBLE CONNECTION (Model TU)
(Trademark of Tuchenhagen GmbH)
Max Working Pressure 25 bar
Dimensions (mm)

Type	d	mb	h	G	Weight kg
Form F DN 25	66	40	45	½" BSP	0.5
Form N DN40 - DN125	84	57	48	½" BSP	1.1

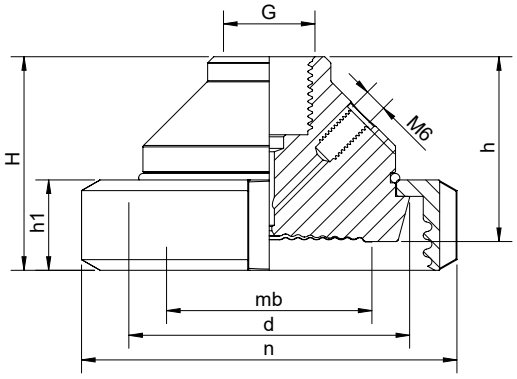

DIN – Standard 11851 (Model D1)
DN 25-40 Max Working Pressure 40 bar
DN 50-80 Max Working Pressure 25 bar
Dimensions (mm)

DN	d	mb	h	G	h1	H	n	Weight kg
25	44	30	45	½" BSP	21	53	63	0.5
32	50	34	43	½" BSP	21	50	70	0.6
40	56	40	45	½" BSP	21	52	78	0.7
50	68.5	50	45	½" BSP	22	52	92	1.1
65	86	66	45	½" BSP	25	54	112	1.5
80	100	76	33	½" BSP	29	51	127	2.0

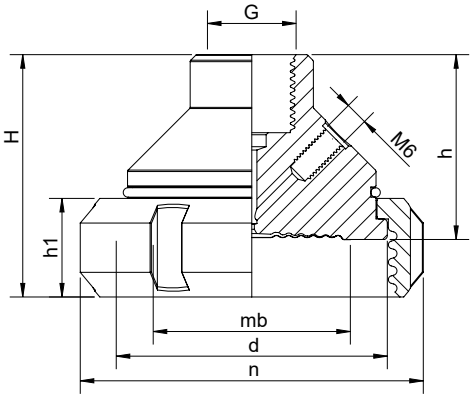

SMS – Standard 1145
DN 1"-2" Max Working Pressure 40 bar
DN 2½" Max Working Pressure 25 bar
Dimensions (mm)

DN	d	mb	h	G	h1	H	n	Weight kg
1"	36	25	44	¼" BSP	19	55	51	0.3
1 ½"	56	36	45	½" BSP	23	59	74	0.7
2"	66	48	45	½" BSP	24	59	84	0.9
2 ½"	80	58	45	½" BSP	28	63	100	1.3
3"	93	72	30	½" BSP	30	50	114	2.0

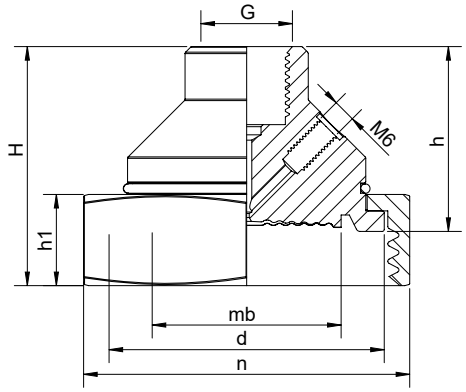

RJT APV– Standard BS 4825 DN 1"-2" Max Working Pressure 40 bar DN 2½" Max Working Pressure 25 bar Dimensions (mm)								
DN	d	mb	h	G	h1	H	N	Weight kg
1"	41	21.5	45	¼" BSP	22.2	58.2	50.8	0.4
1 ½"	54	34	45	½" BSP	22.2	60.15	65	0.6
2"	67	46.4	45	½" BSP	22.2	58.2	79.4	0.9
2 ½"	78	60	45	½" BSP	22.2	58.2	92.1	1.2
3"	93	72	32	½" BSP	22.2	45.2	104.8	1.7

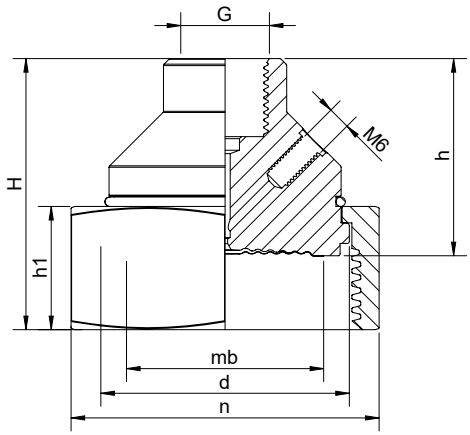

IDF – Standard BS 4825 DN 1"-2" Max Working Pressure 40 bar DN 2½" - 3" Max Working Pressure 25 bar Dimensions (mm)								
DN	d	mb	h	G	h1	H	N	Weight kg
1"	33.9	22	45	¼" BSP	30	64.5	46	0.4
1 ½"	47	36	45	½" BSP	30	63.5	60	0.7
2"	60.5	48	45	½" BSP	30	66	75	1.0
2 ½"	74	60	45	½" BSP	30	66.5	90	1.6
3"	87.5	76	30	½" BSP	30	48.5	105	2.0

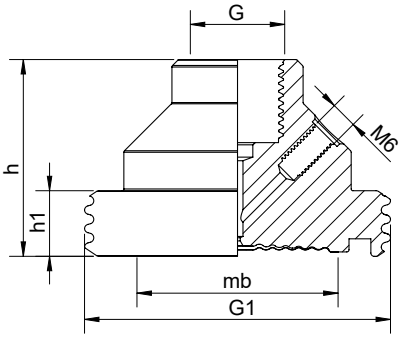

DIN MALE – Standard 11851 (D1) DN 40 Max Working Pressure 40 bar DN 50 Max Working Pressure 25 bar						
DN	d	mb	h	G	h1	Weight kg
40	65	38	50	½" BSP	15	0.5
50	78	50	50	½" BSP	15	0.7

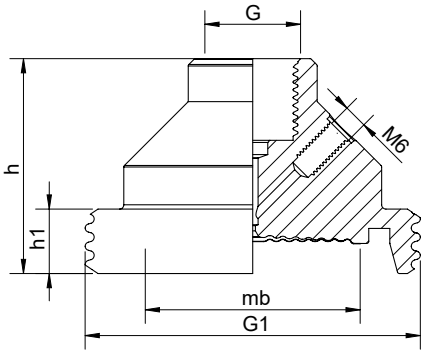

SMS MALE – Standard 1145 DN 1"-2" Max Working Pressure 40 bar						
DN	d	mb	h	G	h1	Weight kg
1"	40	22	45	¼" BSP	11	0.3
1 ½"	60	34	45	½" BSP	15	0.5
2"	70	46	45	½" BSP	15	0.7