Conductive Type Level Switch
CLS

1. CONDUCTIVE TYPE LEVEL SWITCH - CLS

It is a simple, low cost, point level controller designed for detection of conductive liquids, having low densities, high viscosities, containing solid particles and interface between nonconductive and conductive liquids.



1.1 CONSTRUCTION & OPERATION

It comprises of a probe, wired to a level controller. The probe holds one common reference/common electrode and one or multiple “Control Electrodes” depending upon the number of levels to be controlled. All the electrodes are suitably insulated to avoid electrical bridging. The lengths of “Control Electrodes” correspond to the height of preset level points to be controlled and the length of the “reference/common Electrode” is kept slightly longer than the longest “Control Electrode”. If tank is conductive, it can be used as a reference/common electrode. Then number of control electrodes equals number of preset levels. Level controller houses sensing electronics consisting of power supply and signal conditioning circuit which provide a “Low AC Voltage” across mass and control electrodes. On liquid reaching preset level point electrical circuit gets completed - generating a signal which is amplified to actuate a relay, those potential free contacts are available for subsequent operations. On “Level Falling” the circuit breaks, deactivating the relay.

1.2 GENERAL SPECIFICATIONS

Enclosure	:	Cast Al., Weather Proof IP 65
Conduit connection	:	Weather Proof-Brass ¾” ET (S.C.) ¾” ET / ½” NPT (D.C)
Process connection	:	ANSI, BS, DIN Standard Flanges
Process conn. material	:	MS or SS304 or SS316
Probe type	:	Solid (upto 4mtrs) Suspended (up to 10 metres)
Electrode material	:	SS304 or SS316
Electrode Insulation	:	PVC (70°C), PTFE (200°C)
Mass Electrode	:	One
Control Electrodes	:	One to Four
Signal Voltage	:	6V AC, 20mA
Resistance	:	40K (max) between reference/ Common Electrode
Min. Conductivity	:	25µS
Max. Temperature	:	70°C (with PVC insulation), 200°C (with PTFE insulation)
Max. Test Pressure	:	20Kg/cm^2 at ambient Temperature

TYPICAL CONSTRUCTION OF CONDUCTIVE LEVEL SWITCH

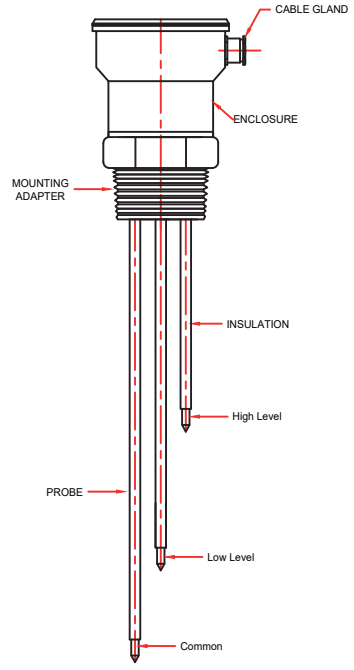

Web: www.pci-instruments.com | Email: sales@pci-instruments.com | Tel: +44 (0)1704 509090

Conductive Type Level Switch
CLS

1.3 ORDERING INFORMATION FOR CONDUCTIVE TYPE LEVEL SWITCH

SPECIFY PART NO. → **CLS** [1] [2] [3] [4] [5]

CLS [ ] [ ] [ ] [ ] [ ]

Example : CLS [1] [2] [3] [4] [5]

1	ENCLOSURE
1	Cast Al., Weather Proof IP 65 x 3/4"ET
2	Cast Al., Ex-proof, GR. IIA & IIB
3	PP Enclosure
4	Teflon
5	Others

2	PROCESS CONNECTION
1	2" 150# ANSI Flange
2	2½" 150# ANSI Flange
3	3" 150# ANSI Flange
4	Others

3	ELECTRODE MOC X INSULATION
1	SS304 x PVC
2	SS316 x PVC
3	SS316L x PTFE
4	Others

4	NO. OF ELECTRODES
1	One (1 Level)
2	Two (1 Level)
3	Three (2 Levels)
4	Four (3 Levels)
5	Others

5	LEVEL CONTROLLER
1	Required
2	Not required *

* Contact factory for ordering without controller

ISO - 9001-14001-45001 Certified

Conformité_Européenne

ABS - Type Approved Product

Low Voltage Directive

INSTALLATION OPTIONS

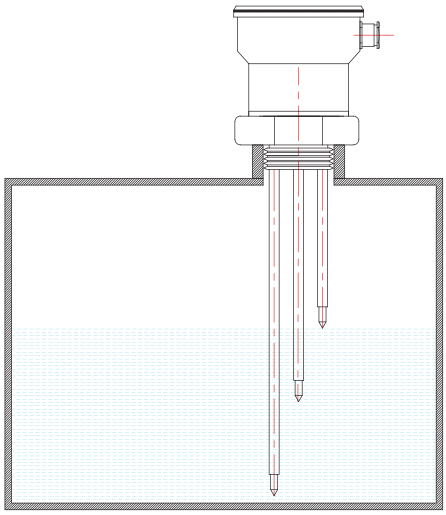

TYPICAL CONSTRUCTION

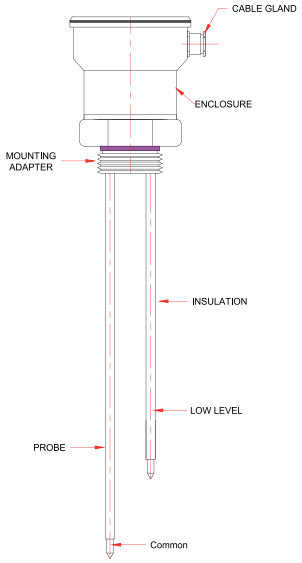

ACCESSORIES



Level Controller

Web: www.pci-instruments.com | Email: sales@pci-instruments.com | Tel: +44 (0)1704 509090

1.4 CONDUCTIVE TYPE LEVEL SWITCHES MOUNTED IN A CHAMBER

Wherever it is not possible or desirable to install Conductive Type Level Switches directly onto the vessel, switches can be installed in an External Chamber. This arrangement gives smooth level control irrespective of turbulence in the process vessel and prevents accidental damages to the switch during shutdown or maintenance of the vessel. Chambers are used in applications which require isolations of process, High Pressure / High Temperature applications, Corrosive applications, Onshore / Offshore installations.

Main function of these chambers are:

1. Level Measurement
2. Interface Measurement between two liquids.

FEATURES

- Available for Low Pressure and High Pressure applications.
- Wide range of material of construction to suit different environmental conditions.
- Wide range of end connection types / sizes to choose from.
- A variety of chamber mounting arrangements provided to suit existing nozzles.
- Auto Sensitive - Self adjusts to liquid Conductivities (> 25µS)

CONDUCTIVE TYPE LEVEL SWITCHES MOUNTED IN A CHAMBER

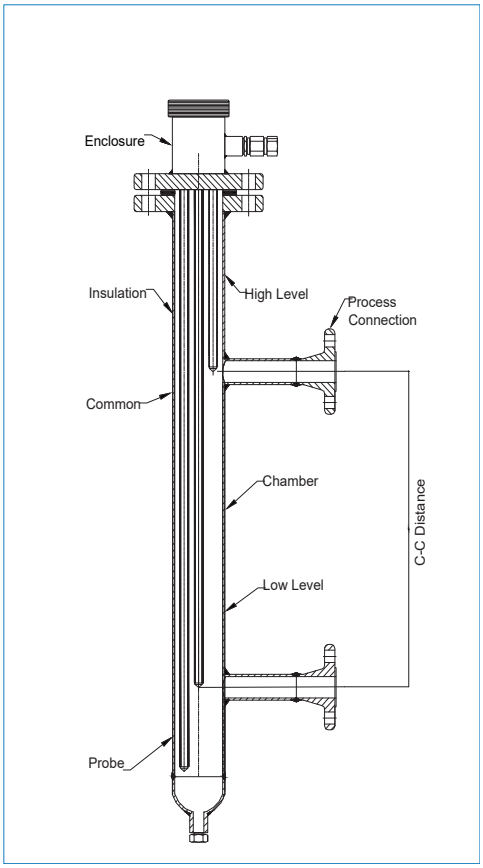

Web: www.pci-instruments.com | Email: sales@pci-instruments.com | Tel: +44 (0)1704 509090