Differential Pressure Gauge, Capsule Type
Bipress 300

'Quality Matters'

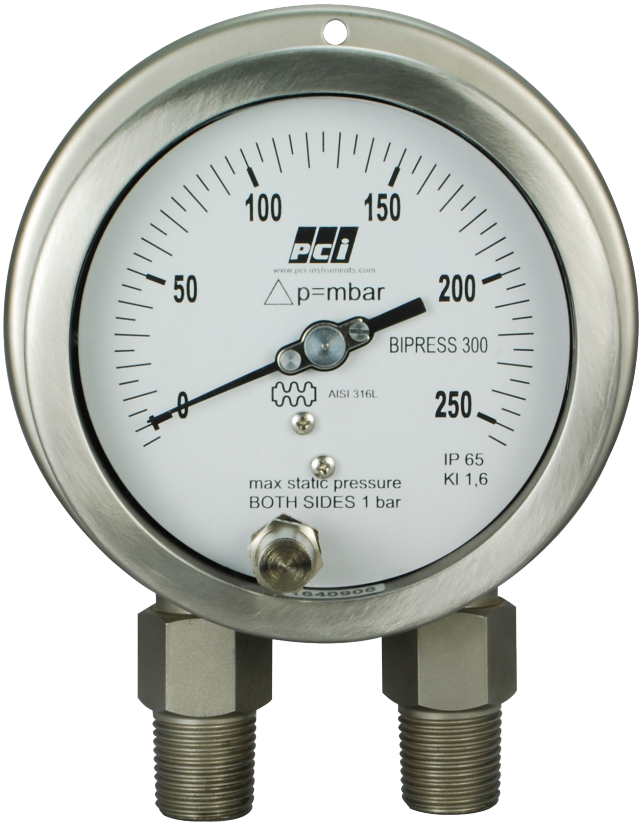

Introduction

The differential pressure gauges series BP300, are suitable to be installed to measure air or clean gases in the presence of low static pressure on chemical, petrochemical plants, onshore and offshore applications, machinery, food processing and in the pharmaceutical industry.

Specifications

- Diameters: 100-150 mm
- Case and ring: st. st. 304, bayonet type ring
- Protection degree: IP55
- Window: acylic, gasket in neoprene
- Movement: brass
- Dial: aluminium with black numerals on white back ground
- Pointer: aluminium, black painted, adjustable
- Blow out: EPDM, upper
- Sensing element: capsule
- Element material: AISI 316
- Process connection material: AISI 316
- Connection dimension: 1/2" NPTM or BSPM
- Mounting:
  type C surface mounting, bottom connection
  type E panel mounting, back connection
- Ranges: see table at page 2
- Accuracy: class 2,5 acc. to EN837
- Scale amplitude: 270°
- Ambient temperature limit: -25/+65°C
- Fluid temperature limit: max 100°C
- Temperature error: 0,08%/°C in range 10/30°C
- Construction acc. to ATEX directive 94/9/EC, gr.II cat. 2GDc (on request)

Options

- Inter axes process connection 54mm
- Case and ring in AISI 316S
- Internal dampener (screw on the connection)
- Special scales

Available certification

- 2.1 certificate of conformity
- 3.1 material certificate
- Test certificate for indication accuracy
- ATEX 94/9/EC conformity certificate (for ATEX version)

How to order

Please specify: model, mounting, range, connection, options, certificates
Example: BP300, C, 0/100mbar, 2 x ½" NPTM,

Web: www.pci-instruments.com | Email: sales@pci-instruments.com | Tel: +44 (0)1704 509090

		Ranges									
Differential pressure	mbar	0/4	0/6	0/10	0/16	0/25	0/60	0/100	0/160	0/250	0/400
Static pressure on both sides	bar	1	1	1	1	1	1	1	1	1	1

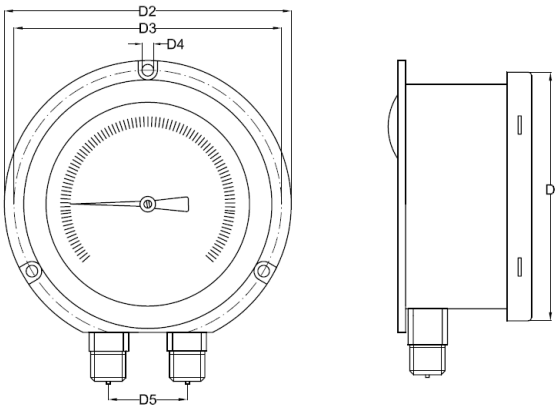

Type C: surface mounting, bottom connection, with rear flange

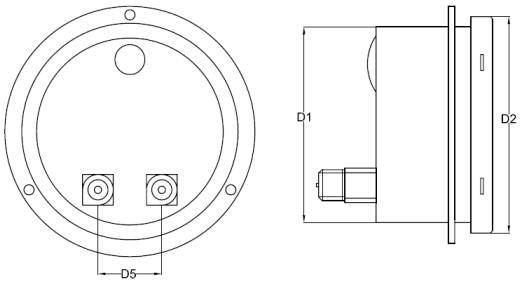

Type F: Panel mounting, lower back connection, 3 hole front flange

Diameter	D	D1	D2	D3	D4	D5	Weight kg	Connections
100	110	100	130	118	6	50	1.4	1/2" BSP / NPT
150	160	150	190	175	6	50	1.6	1/2" BSP / NPT