Hygienic Diaphragm Seal Gauges
TETROPRESS 300 + HYGIENIC SEAL



Introduction
Hygienic diaphragm pressure gauges expertly engineered in Britain to the highest standards, ensuring optimal performance for applications in the food processing and pharmaceutical industries.

Special features
- Flush welded diaphragm (free of dead space)
- Diaphragm protected against rupture with backup convolution
- Helium leak tested to ensure integrity of diaphragm
- Suitable for CIP and SIP processes
- Engineered to reduce measurement errors from high temperatures

Measuring range
- Min. 0-1 bar, max. 0-40 bar, vacuum & compound

Diaphragm seal specifications
(See next page for hygienic connection types)
- Body material: AISI 316L
- Nut material: AISI 304
- Wetted parts and diaphragm material: AISI 316L


Tri - Clamp


Varivent®


DIN


SMS


RJT


IDF

Technical specifications
Nominal size: 63 – 100 – 160mm
Accuracy class (EN 837-1/6)**:** 1,0
Operating temperature range: Ambient: -20/+60 °C
Degree of protection: IP 65 (EN 60529)
Connection: Stainless steel 316L, bottom, bottom back, centre back (63mm case)
Measuring element:
Bourdon tube, stainless steel 316 Ti/316L
≤ 60 bar: "C" type tube, Tightness-tested with helium
Movement: Stainless steel
Dial: Aluminium, white, Scaling black
Pointer: Aluminium, black
Housing: Stainless steel 304, with blow-out
Bayonet type bezel: Stainless steel 304
Window: Acrylic

Options
- Diaphragm with surface roughness Ra <0.38 µm for high cleanability in CIP process
- Diaphragm connected to pressure gauge using a cooling tower or capillary
- Autoclave version for up 134ºC ambient
- ATEX version
- Electrical contacts
- Min/Max value pointer
- Special scales, dual scales
- Internal dampening for strong pulsations and vibrations

Available certification
- 2.1 certificate of conformity
- 3.1 material certificate
- Test certificate for indication accuracy

How to order
Please specify: model, case size, mounting, range, diaphragm seal, options, certificates
Example: TP300, 100mm, A, 0-10 bar, 2” tri-clamp

Web: www.pci-instruments.com | Email: sales@pci-instruments.com | Tel: +44 (0)1704 509090

Hygienic Diaphragm Seal Gauges
TETROPRESS 300 + HYGIENIC SEAL

Bottom connection (A)

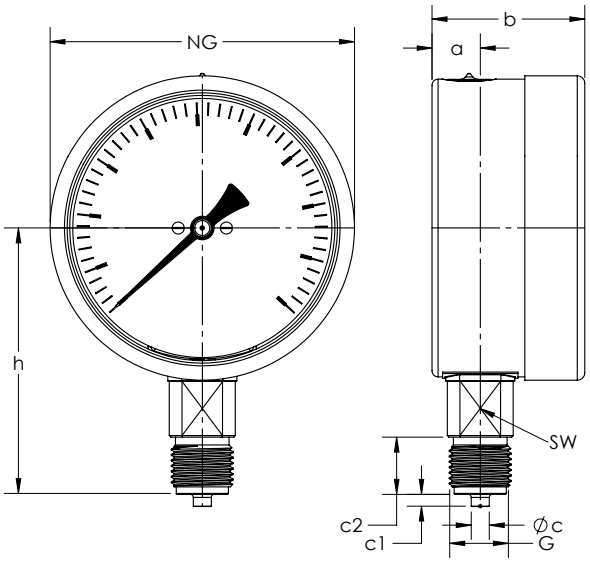

Dimensions (mm)								
NG	a	b	⌀c	c1	c2	G	h	SW
100	15.6	49	6	3	20	G1/2B	86	22
160	17.5	50	6	3	20	G1/2B	116	22

Back connection (D)

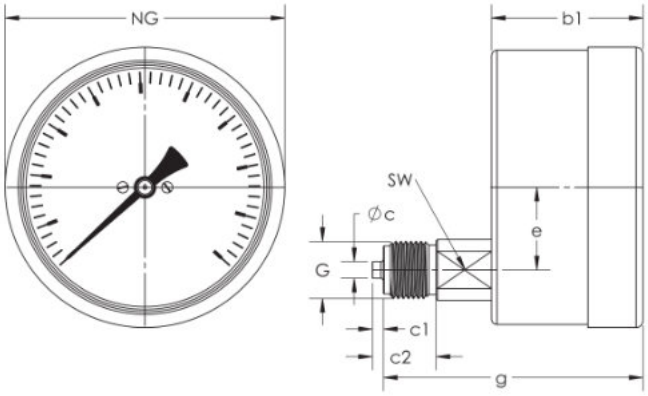

Dimensions (mm)								
NG	b2	⌀c	c1	c2	e	G	g	SW
100	49	6	3	20	34.5	G1/2B	83	22
160	50	6	3	20	34.5	G1/2B	84	22

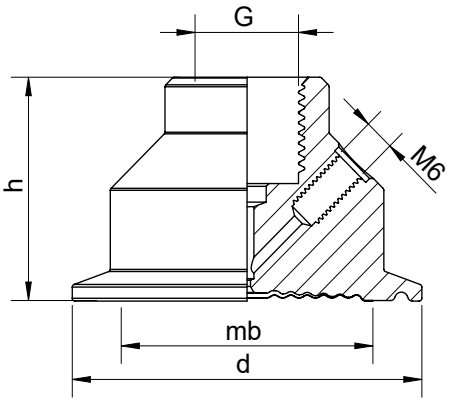

TRI-CLAMP
DIN 32676 Series C for pipes per ASME-BPE
DIN 32676 Series A for pipes per EN 10357
ISO 2852 for pipes per ISO 2037
Dimensions (mm)

Compatible Standard Sizes

DIN C	DIN A	ISO	d	mb	h	G	kg
1"	DN25	DN25	50.4	23.2	39	½" BSP	0.3
1 ½"	DN40	DN38	50.4	34	39	½" BSP	0.3
2"	DN50	DN51	63.9	46.4	40	½" BSP	0.5
2 ½"	-	DN63.5	77.5	58	40	½" BSP	0.6
3"	DN65	DN76.1	90.9	69	38	½" BSP	0.9
4"	DN100	DN101.6	118.9	89	27	½" BSP	1.5

Max pressure dependant on size and clamp type used

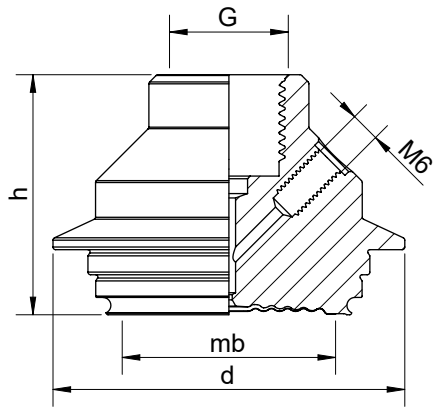

VARIVENT® COMPATIBLE CONNECTION (Model TU)
(Trademark of Tuchenhagen GmbH)
Max Working Pressure 25 bar
Dimensions (mm)

Type	d	mb	h	G	Weight kg
Form F DN 25	66	40	45	½" BSP	0.5
Form N DN40 - DN125	84	57	48	½" BSP	1.1

Hygienic Diaphragm Seal Gauges
TETROPRESS 300 + HYGIENIC SEAL

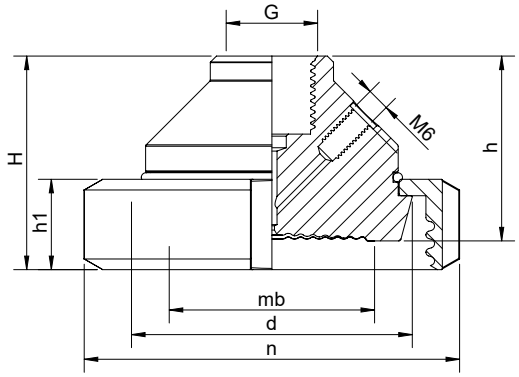

DIN – Standard 11851 (Model D1)
DN 25-40 Max Working Pressure 40 bar
DN 50-80 Max Working Pressure 25 bar
Dimensions (mm)

DN	d	mb	h	G	h1	H	n	Weight kg
25	44	30	45	½" BSP	21	53	63	0.5
32	50	34	43	½" BSP	21	50	70	0.6
40	56	40	45	½" BSP	21	52	78	0.7
50	68.5	50	45	½" BSP	22	52	92	1.1
65	86	66	45	½" BSP	25	54	112	1.5
80	100	76	33	½" BSP	29	51	127	2.0

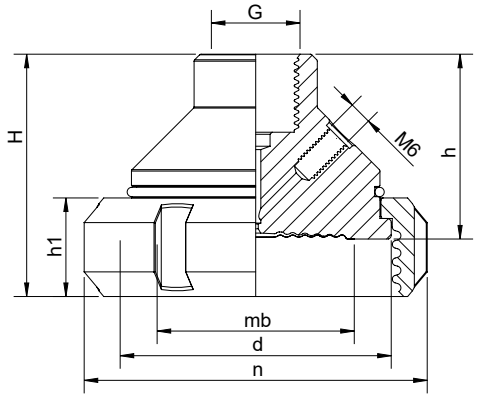

SMS – Standard 1145
DN 1"-2" Max Working Pressure 40 bar
DN 2½" Max Working Pressure 25 bar
Dimensions (mm)

DN	d	mb	h	G	h1	H	n	Weight kg
1"	36	25	44	¼" BSP	19	55	51	0.3
1 ½"	56	36	45	½" BSP	23	59	74	0.7
2"	66	48	45	½" BSP	24	59	84	0.9
2 ½"	80	58	45	½" BSP	28	63	100	1.3
3"	93	72	30	½" BSP	30	50	114	2.0

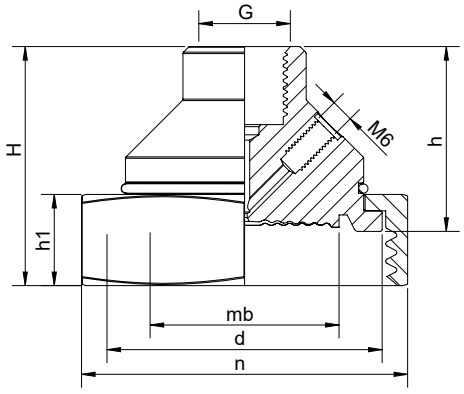

RJT APV– Standard BS 4825
DN 1"-2" Max Working Pressure 40 bar
DN 2½" Max Working Pressure 25 bar
Dimensions (mm)

DN	d	mb	h	G	h1	H	N	Weight kg
1"	41	21.5	45	¼" BSP	22.2	58.2	50.8	0.4
1 ½"	54	34	45	½" BSP	22.2	60.15	65	0.6
2"	67	46.4	45	½" BSP	22.2	58.2	79.4	0.9
2 ½"	78	60	45	½" BSP	22.2	58.2	92.1	1.2
3"	93	72	32	½" BSP	22.2	45.2	104.8	1.7

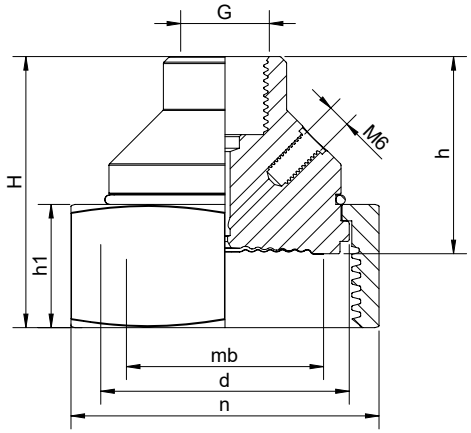

IDF – Standard BS 4825
DN 1"-2" Max Working Pressure 40 bar
DN 2½" - 3" Max Working Pressure 25 bar
Dimensions (mm)

DN	d	mb	h	G	h1	H	N	Weight kg
1"	33.9	22	45	¼" BSP	30	64.5	46	0.4
1 ½"	47	36	45	½" BSP	30	63.5	60	0.7
2"	60.5	48	45	½" BSP	30	66	75	1.0
2 ½"	74	60	45	½" BSP	30	66.5	90	1.6
3"	87.5	76	30	½" BSP	30	48.5	105	2.0

Specifications are subject to change without notice

Web: www.pci-instruments.com | Email: sales@pci-instruments.com | Tel: +44 (0)1704 509090

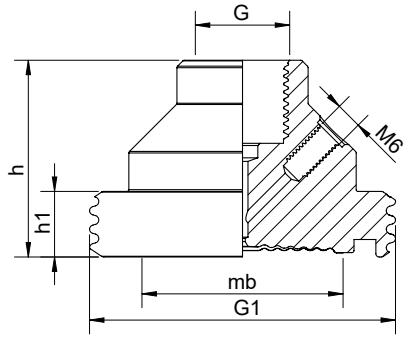

DIN MALE – Standard 11851 (D1) DN 40 Max Working Pressure 40 bar DN 50 Max Working Pressure 25 bar						
DN	d	mb	h	G	h1	Weight kg
40	65	38	50	½" BSP	15	0.5
50	78	50	50	½" BSP	15	0.7

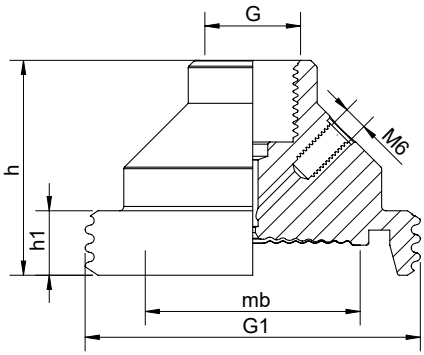

SMS MALE – Standard 1145 DN 1"-2" Max Working Pressure 40 bar						
DN	d	mb	h	G	h1	Weight kg
1"	40	22	45	¼" BSP	11	0.3
1 ½"	60	34	45	½" BSP	15	0.5
2"	70	46	45	½" BSP	15	0.7